CCC-601

OAK RIDGE NATIONAL LABORATORY

managed by
LOCKHEED MARTIN ENERGY RESEARCH CORPORATION
for the
U.S. DEPARTMENT OF ENERGY

RSICC COMPUTER CODE COLLECTION

GENII 1.485

Environmental Radiation Dosimetry Software System

Contributed by:

Pacific Northwest Laboratory, Richland, Washington
through the
DOE Energy Science & Technology Software Center
Oak Ridge, Tennessee
and
Westinghouse HEDL, Richland, Washington

RADIATION SAFETY INFORMATION COMPUTATIONAL CENTER

Legal Notice: This material was prepared as an account of Government sponsored work and describes a code system or data library which is one of a series collected by the Radiation Safety Information Computational Center (RSICC). These codes/data were developed by various Government and private organizations who contributed them to RSICC for distribution; they did not normally originate at RSICC. RSICC is informed that each code system has been tested by the contributor, and, if practical, sample problems have been run by RSICC. Neither the United States Government, nor the Department of Energy, nor Lockheed Martin Energy Research Corporation, nor any person acting on behalf of the Department of Energy or Lockheed Martin Energy Research Corporation, makes any warranty, expressed or implied, or assumes any legal liability or responsibility for the accuracy, completeness, usefulness or functioning of any information code/data and related material, or represents that its use would not infringe privately owned rights. Reference herein to any specific commercial product, process, or service by trade name, trademark, manufacturer, or otherwise, does not necessarily constitute or imply its endorsement, recommendation, or favoring by the United States Government, the Department of Energy, Lockheed Martin Energy Research Corporation, nor any person acting on behalf of the Department of Energy, or Lockheed Martin Energy Research Corporation.

Distribution Notice: This code/data package is a part of the collections of the Radiation Safety Information Computational Center (RSICC) developed by various government and private organizations and contributed to RSICC for distribution. Any further distribution by any holder, unless otherwise specifically provided for is prohibited by the U.S. Dept. Of Energy without the approval of RSICC, P.O. Box 2008, Oak Ridge, TN 37831-6362.

Documentation for CCC-601/GENII 1.485 Code Package

PAGE

RSICC Computer Code Abstract iii

"GENII - The Hanford Environmental Radiation Dosimetry Software System, Volume 1: Conceptual Representation," B. A. Napier, R. A. Peloquin, D. L. Strenge, and J. V. Ramsdell, PNL-6584 Vol. 1 (December 1988) . . . . . Section 1

"GENII - The Hanford Environmental Radiation Dosimetry Software System, Volume 2: Users' Manual," B. A. Napier, R. A. Peloquin, D. L. Strenge, and J. V. Ramsdell, PNL-6584 Vol. 2 (November 1988) . . . . . Section 2

"Verification Tests for the July 1993 Revision to the GENII Radionuclide and Dose Increment Libraries," P. D. Rittmann, WHC-SD-WM-TI-596, Rev. 0 (October 1993) . . . . . Section 3

(Total Pages 472; February 1997)

RSIC CODE PACKAGE CCC-601 MICRO

1. NAME AND TITLE

GENII 1.485: Environmental Radiation Dosimetry Software System.

AUXILIARY CODE:

APPRENTICE: Interactive input processor for GENII.

MASS: Enables the mass production of GENII output using a file containing one or more nuclide groups and several input files.

2. CONTRIBUTORS

Pacific Northwest Laboratory, Richland, Washington through the Energy Science & Technology Software Center, Oak Ridge, Tennessee.

Westinghouse Hanford Engineering Development Laboratory, Richland, Washington.

3. CODING LANGUAGE AND COMPUTER

IBM PC; FORTRAN 77 and Quick Basic (C00601/IBMPC/02).

4. NATURE OF PROBLEM SOLVED

GENII was developed to incorporate the internal dosimetry models recommended by the International Commission on Radiological Protection (ICRP) into the environmental pathway analysis models used at Hanford. GENII is a coupled system of seven programs and the associated data libraries that comprise the Hanford Dosimetry System (Generation II) to estimate potential radiation doses to individuals or populations from both routine and accidental releases of radionuclides to air or water and residual contamination from spills or decontamination operations. The GENII system includes interactive menu-driven programs to assist the user with scenario generation and data input, internal and external dose factor generators, and environmental dosimetry programs. The programs analyze environmental contamination resulting from both far-field and near-field scenarios. A far-field scenario focuses outward from a source, while a near-field scenario focuses in toward a receptor. GENII can calculate annual dose, committed dose, and accumulated dose from acute and chronic releases from ground or elevated sources to air or water and from initial contamination of soil or surfaces and can evaluate exposure pathways including direct exposure via water (swimming, boating, and fishing), soil (surface and buried sources), air (semi-infinite and finite cloud geometries), inhalation pathways, and ingestion pathways. In addition, GENII can perform 10,000-years migration analyses and can be used for retrospective calculations of potential radiation doses resulting from routine emissions and for prospective dose calculations for purposes such as siting facilities, environmental impact statements, and safety analysis reports. The alternate data added in March 1995 were contributed by HEDL, and are intended to improve the treatment of decay chains for calculations of doses from contaminated soil allowed to decay for hundreds of years. Air transport calculations are largely unaffected by these changes due to the short decay times involved. In October 1996 the system was repackaged to replace the ZOO archive files with self-extracting DOS files compressed with the PKZIP utility from Pkware, Inc. Some users encountered problems when reading the ZOO files.

5. METHOD OF SOLUTION

APPRENTICE interactively prepares a text input file for the near-term (Approximately 1 to 100 years) environmental dosimetry programs and a batch processing file to manage the file handling needed to control the operations of the five subsequent codes and prepare an output report. ENVIN controls the reading and organization of the input files for ENV, which then calculates the environmental transfer, uptake, and human exposure to radionuclides that result from the chosen scenario for the defined source term. ENV writes the annual media concentrations and intake rates to intermediate data transfer files for use by DOSE. DOSE converts these data to radiation dose, calculating the external dose using factors generated by EXTDF and the internal dose using factors generated in INTDF. DOSE calculates the one-year dose, committed dose,

cumulative dose, and maximum annual dose and prepares the normal output report of doses and optional doses by pathway and by radionuclide. EXTDF calculates the external dose-rate factors for submersion in an infinite cloud of radioactive materials, immersion in contaminated water, and direct exposure to plane or slab sources of contamination. EXTDF used the ISOSHLD point kernel integration technique whereby numerical integration is carried out over the source volume to obtain the total dose. INTDF estimates the dose equivalents in a number of target organs from the activity in a given source organ based on ICRP-30 models and biokinetic values for radionuclide residency and transport in the body. The dose equivalent in a target organ is the product of the total number of nuclear transformations of the radionuclide and the energy absorbed per gram in the target organ. This initial value problem is solved using a coupled set of differential equations. DITTY calculates long-term total population exposure based on air and water source terms, atmospheric dispersion patterns, and exposed population. A straight-line cross-wind-averaged Gaussian plume model is used for the dispersion calculation, and the regional population is defined as a function of time for airborne and waterborne pathways. The time frame may be any 10,000-year period, broken into 143 periods of 70 years each.

6. RESTRICTIONS OR LIMITATIONS

Maximum of 100 radionuclides, 16 sectors, 10 distance intervals, 5 shields.

7. TYPICAL RUNNING TIME

The sample problems took a total of 30 minutes on an IBM PC-AT under DOS 3.3.

8. COMPUTER HARDWARE REQUIREMENTS

GENII requires an IBM PC/AT or compatible computer, an 80287 math coprocessor, 640 Kbytes of random access memory, and a minimum of 5 MB on-line disk storage.

9. COMPUTER SOFTWARE REQUIREMENTS

Lahey F77L (92%) and Microsoft QuickBASIC 3.0 (8%) were used to create the executables, which runs under DOS 3.1 or later. It also runs from a DOS window of Windows95. The GENII and APPRENTICE source files were added to the package in the March 1995 update. APPRENTICE, which is written in Microsoft QuickBASIC 3.0, uses modules and subroutines from the Komputerwerk FINALLY! Modules libraries.

10. REFERENCES

B. A. Napier, R.A. Peloquin, D. L. Strenge, and J. V. Ramsdell, "GENII - The Hanford Environmental Radiation Dosimetry Software System, Volume 1: Conceptual Representation," PNL-6584 Vol. 1 (December 1988).

B. A. Napier, R. A. Peloquin, D. L. Strenge, and J. V. Ramsdell, "GENII - The Hanford Environmental Radiation Dosimetry Software System, Volume 2: Users' Manual," PNL-6584 Vol. 2 (November 1988).

P. D. Rittmann, "Verification Tests for the July 1993 Revision to the GENII Radionuclide and Dose Increment Libraries," WHC-SD-WM-TI-596, Rev. 0 (October 1993).

11. CONTENTS OF CODE PACKAGE

Enclosed are the references listed above and the executable programs, source codes, sample cases and data files on 4 DS/HD 3.5-in. (1.44 MB) diskettes in self-extracting compressed DOS files.

12. DATE OF ABSTRACT

April 1992, revised March 1995, February 1997.

KEYWORDS: ENVIRONMENTAL DOSE; FISSION PRODUCT INVENTORY; INTERNAL DOSE; LIQUID PATHWAY; MICROCOMPUTER; RADIOACTIVITY RELEASE; RADIOLOGICAL SAFETY; RADIONUCLIDES

SECTION 1

PNL-6584 Vol. 1
UC-600

Hanford Environmental Dosimetry Upgrade Project

GENII - The Hanford Environmental Radiation Dosimetry Software System

Volume 1: Conceptual Representation

B. A. Napier
R. A. Peloquin
D. L. Strenge
J. V. Ramsdell

December 1988

Prepared for the U.S. Department of Energy
under Contract DE-AC06-76RLO 1830

Pacific Northwest Laboratory
Operated for the U.S. Department of Energy
by Battelle Memorial Institute

Battelle

PNL-6584 Vol. 1

DISCLAIMER

This report was prepared as an account of work sponsored by an agency of the United States Government. Neither the United States Government nor any agency thereof, nor Battelle Memorial Institute, nor any or their employees, makes any warranty, expressed or implied, or assumes any legal liability or responsibility for the accuracy, completeness, or usefulness of any information, apparatus, product, or process disclosed, or represents that its use would not infringe privately owned rights. Reference herein to any specific commercial product, process, or service by trade name, trademark, manufacturer, or otherwise does not necessarily constitute or imply its endorsement, recommendation, or favoring by the United States Government or any agency thereof, or Battelle Memorial Institute. The views and opinions of authors expressed herein do not necessarily state or reflect those of the United States Government or any agency thereof.

PACIFIC NORTHWEST LABORATORY
operated by
BATTELLE MEMORIAL INSTITUTE
for the
UNITED STATES DEPARTMENT OF ENERGY
under Contract DE-AC06-76RLO 1830

Printed in the United States of America
Available from
National Technical Information Service
United States Department of Commerce
5285 Port Royal Road
Springfield, Virginia 22161

NTIS Price Codes
Microfiche A01

Printed Copy

Pages	Price Codes
001-025	A02
026-050	A03
051-075	A04
076-100	A05
101-125	A06
126-150	A07
151-175	A08
176-200	A09
201-225	A10
226-250	A11
251-275	A12
276-300	A13

NESC No. 9465

GENII

PNL-6584, Vol.1
Dec. 1988

PNL-6584, Vol. 1
UC-600

HANFORD ENVIRONMENTAL DOSIMETRY UPGRADE PROJECT

GENII - THE HANFORD ENVIRONMENTAL RADIATION DOSIMETRY SOFTWARE SYSTEM

VOLUME 1: Conceptual Representation

B. A. Napier
R. A. Peloquin
D. L. Strenge
J. V. Ramsdell

December 1988

Prepared for
the U.S. Department of Energy
under Contract DE-AC06-76RLO 1830

Pacific Northwest Laboratory
Richland, Washington 99352

ABSTRACT

The Hanford Environmental Dosimetry Upgrade Project was undertaken to incorporate the internal dosimetry models recommended by the International Commission on Radiological Protection (ICRP) in updated versions of the environmental pathway analysis models used at Hanford. The resulting second generation of Hanford environmental dosimetry computer codes is compiled in the Hanford Environmental Dosimetry System (Generation II, or GENII). The purpose of this coupled system of computer codes is to analyze environmental contamination resulting from acute or chronic releases to, or initial contamination of, air, water, or soil. This is accomplished by calculating radiation doses to individuals or populations.

GENII is described in three volumes of documentation. The first volume describes the theoretical considerations of the system. The second volume is a Users' Manual, providing code structure, users' instructions, required system configurations, and QA-related topics. The third volume is a Code Maintenance Manual for the user who requires knowledge of code detail. It includes code logic diagrams, global dictionary, worksheets, example hand calculations, and listings of the code and its associated data libraries.

ACKNOWLEDGMENTS

This work was performed as part of the Dose Overview Project for the U.S. Department of Energy, Richland Operations Office. The authors would like to thank all those individuals who helped make possible the development of this software package. Assisting in developing the project as well as the code package were the successive managers of the Dose Overview Project: Ron Kathren, the late Ed Watson, Jerry Martin, and R. Gene Schreckhise. Members of the Hanford Dose Overview Panel, including Darrell Fisher, Paul Rittman, and Janet Davis, provided the initial code capability requirements. Valuable developmental assistance was provided by S. Keith Hargrove, Mike Madison, Jaime Lara, and Phil Pohl, of the NORCUS REST and GEM programs. We especially thank Joe Soldat for extending his computer literacy as our chief test subject in code debugging. Finally, we would like to thank Peggy Upton, Marianna Cross, and their co-workers for suffering through the editing and production of this series.

CONTENTS OF VOLUME 1: CONCEPTUAL REPRESENTATION

ABSTRACT iii

ACKNOWLEDGMENTS v

1.0 INTRODUCTION 1.1

1.1 DEVELOPMENT OF THE GENII SYSTEM 1.4

1.2 QUALITY ASSURANCE ISSUES 1.5

2.0 CONCEPTS IN ENVIRONMENTAL DOSIMETRY 2.1

2.1 SCENARIO DEFINITION 2.1

2.1.1 Far-Field Scenarios 2.1

2.1.2 Near-Field Scenarios 2.2

2.2 EXPOSURE PATHWAYS 2.3

3.0 CODE FUNCTIONAL DESCRIPTIONS 3.1

3.1 APPRENTICE 3.1

3.2 ENVIN 3.2

3.3 ENV 3.2

3.4 DOSE 3.3

3.5 EXTDF 3.13

3.6 INTDF 3.14

3.7 DITTY 3.16

4.0 MATHEMATICAL REPRESENTATIONS 4.1

4.1 INTERNAL DOSIMETRY 4.1

4.1.1 The General Model 4.1

4.1.2 The Alkaline Earth Model 4.6

4.1.3 The Iodine Model 4.9

4.1.4 The Tellurium/Iodine Model 4.9

4.1.5 The Radium/Radon Model 4.13

4.1.6 The Tritium and Carbon Models 4.13

4.1.7 Decay Data 4.15

4.1.8 Metabolic Data 4.16

4.1.9 Dosimetric Data 4.17

4.2 EXTERNAL DOSIMETRY 4.19

4.2.1 Point Kernel Integration 4.19

4.2.2 Mixed Mass Attenuation Coefficients 4.21

4.2.3 The Build-Up Factor 4.21

4.2.4 Conversion of Surface Dose to Effective Dose Equivalent 4.23

4.3 ATMOSPHERIC DISPERSION 4.25

4.3.1 Gaussian Plume Models 4.26

4.3.2 Diffusion Coefficients 4.30

4.3.3 Effective Release Height 4.31

4.3.4 Building-Wake Diffusion Model 4.34

4.3.5 Deposition and Depletion 4.38

4.3.6 Wind Profiles 4.39

4.3.7 Atmospheric Dispersion Model Limitations 4.40

4.4 SUBMERSION 4.42

4.4.1 Semi-Infinite Plume Model 4.42

4.4.2 Finite Plume Model 4.43

4.5 SURFACE WATER TRANSPORT MODELS 4.53

4.6 SOIL CONTAMINATION MODEL 4.56

4.6.1 Deposition Rates 4.57

4.6.2 Removal Rates 4.58

4.6.3 Biotic Transport 4.59

4.6.4 Manual Redistribution 4.60

4.7 TERRESTRIAL EXPOSURE PATHWAYS 4.60

4.7.1 Inhalation 4.62

4.7.2 Drinking Water Ingestion 4.64

4.7.3 Aquatic Food Ingestion 4.66

4.7.4 Crop Ingestion - Chronic Exposures 4.66

4.7.5 Animal Product Ingestion - Chronic Exposures . . . 4.70

4.7.6 Terrestrial Food Pathways Models - Acute Releases . 4.72

4.7.7 External Exposure 4.76

4.7.8 Population Dose Calculations 4.85

4.7.9 Special Models for ^{3}H and ^{14}C 4.86

4.8 LONG-TERM CALCULATIONS 4.90

4.8.1 Incorporation of Long-Term Sources 4.90

4.8.2 Long-Term Airborne Releases 4.91

4.8.3 Long-Term Waterborne Releases 4.92

4.8.4 Long-Term Environmental Concentrations 4.93

4.8.5 Long-Term Pathway Dose Calculations 4.99

5.0 SOLUTION TECHNIQUES 5.1

6.0 REFERENCES 6.1

APPENDIX - HEDUP System Design Requirements Report A.1

CONTENTS OF VOLUME 2: USERS' MANUAL

ABSTRACT

ACKNOWLEDGMENTS

1.0 INTRODUCTION

2.0 CODE STRUCTURE

2.1 USER INTERACTION LEVELS

2.1.1 Level 0 User Interaction - Environmental Dosimetry

2.1.2 Level 1 User Interaction - Environmental Dosimetry

2.1.3 Level 1 User Interaction - External Dose Factors

2.1.4 Level 1 User Interaction - Internal Dose Factors

2.1.5 Level 1 User Interaction - DITTY Long-Term Calculations

2.2 DATA TRANSFER FILE DESCRIPTIONS

2.2.1 ENVIN/ENV/DOSE Input File Buffer - GENII.IN

2.2.2 Joint Frequency Input File Buffer - JOINTRE.IN

2.2.3 Chi/Q Input/Report File Buffer - CHIQ.IN

2.2.4 Population Grid Input File Buffer - POP.IN

2.2.5 Food Production Grid Input File Buffer - FOODPROD.IN

2.2.6 Parameter Default Value Input File Buffer - DEFAULT.IN

2.2.7 ENV Input File Buffer - ENV.IN

2.2.8 INTDF Input File Buffer - INTDF.IN

2.2.9 DITTY Input File Buffer - DITTY.IN

2.2.10 DITTY Water Release Input File Buffer - WATREL.IN

2.2.11 DITTY Air Release Input File Buffer - AIRREL.IN

2.2.12 EXTDF Input File Buffer - EXTDF.IN

2.2.13 ENV Report File Buffer - GENII2.OUT

2.2.14 ENVIN Report File Buffer - GENII.OUT

2.2.15 DOSE Report File Buffer - DOSE.OUT

2.2.16 ENV Media Concentration Report File Buffer - MEDIA.OUT

2.2.17 DOSE Summary Dose Report File Buffer - DOSEQA.OUT

2.2.18 ENV Report File Buffer - ENV.OUT

2.2.19 INTDF Report File Buffer - INTDF.OUT

2.2.20 INTDF CDE Yearly Increment File Buffer - CDEINC.OUT

2.2.21 INTDF CDE File Buffer - CDE.OUT

2.2.22 DITTY Report File Buffer - DITTY.OUT

2.2.23 DITTY Summary Dose Report File Buffer - DITTYQA.OUT

2.2.24 EXTDF Report File Buffer - EXTDF.OUT

2.3 DATA LIBRARY DESCRIPTIONS

2.3.1 Radionuclide Master Library - RMDLIB.DAT

2.3.2 Metabolic Data Library - METADATA.DAT

2.3.3 Radionuclide List by Atomic Number - RMDBYELE.DAT

2.3.4 Food Transfer Library - FTRANS.DAT

2.3.5 Bioaccumulation Library - BIOAC1.DAT

2.3.6 External Dose Factor Library - GRDF.DAT

2.3.7 Radioactive Decay Data for RMDLIB - ENERGY.DAT

2.3.8 DITTY Internal Dose Factor Library - DSFCT30.DAT

2.3.9 Attenuation Coefficients and Build-Up Factor - ISOLIB.DAT

2.3.10 Committed Dose Equivalent Yearly Increment Library - DOSINC.DAT

2.3.11 Gamma Energy Library - GAMEN.DAT

2.3.12 Specific Effective Energy Library - SEEn.DAT

2.4 EXTERNAL FILE NAME ASSIGNMENTS - FILENAME.DAT

3.0 USER'S INSTRUCTIONS

3.1 APPRENTICE

3.2 ENVIRONMENTAL DOSIMETRY PACKAGE: ENVIN/ENV/DOSE

3.3 EXTDF

3.3.1 Title

3.3.2 NAMELIST

3.3.3 Shield Material Specification

3.4 INTDF

3.5 DITTY

3.5.1 Case Structure Input

3.5.2 NAMELIST INPUT Parameters

3.5.3 Other Input Parameters

4.0 SYSTEM REQUIREMENTS

5.0 QUALITY ASSURANCE (QA)-RELATED TOPICS

6.0 REFERENCES

APPENDIX A - SAMPLE INPUT AND OUTPUT

APPENDIX B - SELF-GENERATED DIAGNOSTICS

CONTENTS OF VOLUME 3: CODE MAINTENANCE MANUAL

ABSTRACT

ACKNOWLEDGMENTS

1.0 INTRODUCTION

2.0 CODE STRUCTURE AND LOGIC DIAGRAMS

2.1 SOFTWARE CONFIGURATION CONTROL, TESTING, AND VERIFICATION

3.0 GLOBAL DICTIONARY AND COMMON BLOCK USAGE

4.0 HAND CALCULATION WORKSHEETS

5.0 LISTINGS

5.1 CODE LISTINGS

APPRENTICE

APPRENTICE

ENVIN

ENV

DOSE

DITTY

INTDF

EXTDF

UNFORMAT

UNSEE

GENERAL

COMMON BLOCKS

5.2 DATA FILE LISTINGS

RMDLIB.DAT

METADATA.DAT

RMDBYELE.DAT

FTRANS.DAT

BIOAC1.DAT

GRDF.DAT

DOSSUM.DAT

DEFAULT.IN

ENERGY.DAT

DSFCT30.DAT

ISOLIB.DAT

DOSINC.OUT

GAMEN.DAT

SEE.IN

PARAMS.DAT

APPRENTICE.DAT

FIGURES - VOL. 1

1.1 Current User/Computer Program Interaction in the GENII Software Package 1.3

2.1 Available Exposure Pathways in the GENII Package 2.4

3.1 Situation Showing Constant Rate of Radionuclide Intake and Resulting One-Year Dose Rate to Tissue or Organ 3.5

3.2 Situation Showing Committed Dose from One-Year Internal and External Exposure Plus Extended Internal Dose 3.6

3.3 Situation Showing Cumulative Dose Resulting from Residual Environmental Contamination 3.8

3.4 Situation Showing Radionuclide Release That Continues for More Than One Year 3.9

3.5 Situation Showing Maximum Annual Dose from Continuing Exposure 3.11

3.6 Conceptual Matrix Showing Calculation of Annual, Committed, and Cumulative Doses 3.12

3.7 Calculational Scheme for Long-Term Integrated Population Doses 3.19

4.1 The General Model 4.2

4.2 The Alkaline Earth Model 4.7

4.3 The Iodine Model 4.10

4.4 The Tellurium/Iodine Model 4.12

4.5 Point Source (S_o) With a Finite Cylindrical Volume (S_v) at a Distance p from Point P Through Shields of Thickness t1 and t2 . . . . . 4.19

4.6 Schematic of Soil Compartment Interactions 4.57

TABLES - VOL. 1

3.1 Available EXTDF Geometries 3.14

4.1 Equations for the General Model Using Parameters Defined on Page 4.3 . . . . . 4.4

4.2 Deposition Fractions and Clearance Half Times ($t_{1/2}$) for the Lung Model 4.5

4.3 Equations for the Alkaline Earth Model 4.8

4.4 Equations for the Iodine Model 4.11

4.5 Equations for the Tellurium/Iodine Model 4.14

4.6 Equations for the Radium/Radon Model 4.14

4.7 Photon Energy Group Definitions Conversion Factors Used in the INTDF Code 4.24

4.8 Constant Values for Diffusion Coefficient Evaluation 4.31

4.9 Photon Energy Group Definitions and Conversion Factors Used in Finite-Plume Air Submersion Calculations 4.44

4.10 Empirical Constants for the Ground-Level Correction Factor, Ro_j 4.45

4.11 Empirical Constants for Effective Release Height, H^*_j 4.46

4.12 Empirical Constants for Ground-Level Sector Dose Rate Factors 4.48

4.13 Values for "S" Parameters 4.48

4.14 Parameter A_{hj} Values 4.49

4.15 Parameter Dx_{hj} Values 4.49

4.16 Parameter $X1_{hj}$ Values 4.49

4.17 Parameter $X2_{hj}$ Values 4.50

4.18 Parameter $X3_{hj}$ Values 4.50

4.19 Parameter $X4_{hj}$ Values 4.50

4.20 Parameter $X5_{hj}$ Values 4.51

4.21 Parameter $X6_{hj}$ Values 4.51

4.22 Parameter $X7_{hj}$ Values 4.51

4.23 Parameter $X8_{hj}$ Values 4.52

4.24 Parameter $X9_{hj}$ Values 4.52

4.25 Harvested Yield, Standing Biomass, and Ration of Dry to Wet Vegetation Used in Interception and Harvest Removal Models 4.71

4.26 Default Consumption Rates of Feed and Water by Farm Animals . 4.72

4.27 Acute Concentration Equations for Leafy Vegetables 4.77

4.28 Acute Concentration Equations for Other Vegetables 4.78

4.29 Acute Deposition Integrated Concentration Equations for Milk and Beef 4.79

4.30 Acute Deposition Integrated Concentration Equations for Other Animals 4.81

4.31 Suggested Values for Shore-Width Factor 4.83

4.32 Soil Ingestion by Age 4.84

4.33 Fractions of Hydrogen and Carbon in Environmental Media, Vegetation, and Animal Products 4.88

1.0 INTRODUCTION

At the direction of the U.S. Department of Energy (DOE), the Hanford Environmental Dosimetry Upgrade Project was undertaken by Pacific Northwest Laboratory (PNL)[a] to incorporate the internal dosimetry models recommended by the International Commission on Radiological Protection (ICRP) in updated versions of the environmental pathway analysis models used at Hanford. The resulting second generation of Hanford environmental dosimetry computer codes is compiled in the Hanford Environmental Dosimetry System (Generation II or GENII). The GENII system was developed by means of tasks designed to provide a state-of-the-art, technically peer-reviewed, documented set of programs for calculating radiation doses from radionuclides released to the environment. The initial task resulted in a system design requirements report, based on input from the community of potential Hanford users, providing general descriptions of the calculations that the final programs must perform. The recommendations of this report formed the basis for the remainder of the tasks, defining the elements that determined the equation formulation and parameter selection tasks. The complete report, Hanford Environmental Dosimetry Upgrade Project (HEDUP) Task 02 - System Design Requirements, is included here as the appendix.

The general requirements of the GENII system to be designed included the capabilities for calculating radiation doses for acute releases, with options for annual dose, committed dose, and accumulated dose; for calculating the same types of doses from chronic releases; for evaluating exposure pathways including direct exposure via water (swimming, boating, and fishing), soil (surface and buried sources), air (semi-infinite cloud and finite cloud geometries), inhalation pathways, and ingestion pathways. The release scenarios to be included were acute releases to air from ground level or elevated sources, or to water; chronic releases to air from ground level or elevated sources, or to water; and initial contamination of soil or surfaces. Source term variations to be accounted for included decay of radionuclides to the start of the exposure scenario, input of total radioactivity or specified

---

(a) Pacific Northwest Laboratory is operated by Battelle Memorial Institute for the U.S. Department of Energy under Contract DE-AC06-76RLO 1830.

fractions, and input of measured concentrations in specified environmental media. Interfaces were to be provided for external calculations of atmospheric dispersion, geohydrology, biotic transport, and surface water transport. Target populations were to be identified by distance and direction for individuals, populations, and for intruders into contained sources.

As a result of the multitude of initial requirements on the design of the codes, the codes of the Hanford Environmental Dosimetry System can be used to determine radiation doses to individuals or populations from a wide variety of potential exposure scenarios. The core system may be used to calculate annual doses, dose commitments, or accumulated doses from acute or chronic releases of radioactive materials to air or water. This capability essentially replicates that provided in the past by the computer codes KRONIC (Strenge and Watson 1973), SUBDOSA (Strenge, Watson, and Houston 1975), DACRIN (Houston, Strenge, and Watson 1974; Strenge 1975), FOOD and ARRRG (Napier et al. 1980), and PABLM (Napier, Kennedy, and Soldat 1980). Annual doses, dose commitments, and accumulated doses can also be calculated from initial contamination of soil or surfaces, thus incorporating capabilities from PABLM and ONSITE/MAXI (Napier et al. 1984; Kennedy et al. 1986; Kennedy et al. 1987). A limited biotic transport capability is included, simulating the results of BIOPORT/MAXI (McKenzie et al. 1986). One of the codes creates factors relating sources of various geometries to dose rate; this is essentially a modified version of the shielding code ISOSHLD (Engel, Greenborg, and Hendrickson 1966; Simmons et al. 1967). An additional capability, that of predicting very-long-term doses from waste management operations to the public over periods of up to 10,000 years, is incorporated into the system essentially unchanged from the previously documented version of DITTY (Dose Integrated over Ten Thousand Years) (Napier, Peloquin, and Strenge 1986).

The Hanford Environmental Dosimetry System (GENII) is composed of seven linked computer codes and their associated data libraries. These codes and their linkages are illustrated in Figure 1.1. The computer programs are of three types: user interfaces (i.e., interactive, menu-driven programs to assist the user with scenario generation and data input), internal and external dose factor generators, and the environmental dosimetry programs. For maximum flexibility, the portion of the code used for analysis of

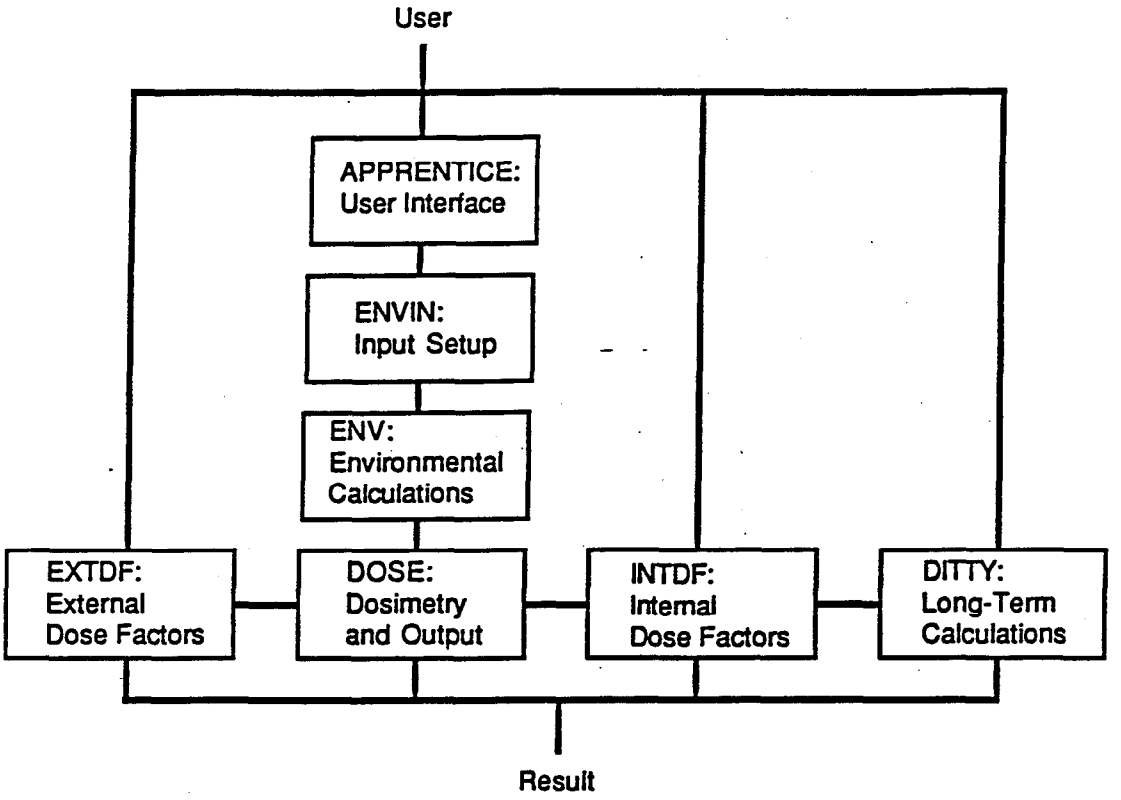

FIGURE 1.1. Current User/Computer Program Interaction in the GENII Software Package

short-term scenarios (as opposed to 10,000-year migration analyses) has been divided into three interrelated but separate programs that handle input organization and checking, environmental exposure, and dose calculations, respectively. The intent of each of these codes is described in Section 3.0 of this document.

GENII is described in three volumes of documentation. This volume describes the theoretical considerations of the system, including the conceptual diagrams, mathematical representations of the solutions, and descriptions of solution techniques, where appropriate. The second volume is a Users' Manual, providing code structure, users' instructions, required system configurations, and topics related to quality assurance (QA). The third volume is a Code Maintenance Manual for the user who requires knowledge of code details, including code logic diagrams, global dictionary, worksheets,

example hand calculations, and listings of the code and its associated data libraries.

1.1 DEVELOPMENT OF THE GENII SYSTEM

A comprehensive set of codes (i.e., environmental pathway models and associated computer programs) has been developed and documented by PNL for estimating potential radiation doses to humans as a result of radionuclides in the environment. The codes address both routine and accidental releases of radionuclides to air or water in addition to other situations (e.g., residual contamination from spills or decommissioning operations). Internal radiation dose calculations are performed using the methods recommended by the ICRP as described in ICRP 26 and 30 (ICRP 1977; ICRP 1979-1982). The codes are based on existing Hanford models and codes, using updated formulations and transfer coefficients. Existing codes incorporated include DACRIN (Houston, Strenge, and Watson 1974; Strenge 1975), PABLM (Napier, Kennedy, and Soldat 1980), MAXI (Napier et al. 1984), DITTY (Napier, Peloquin, and Strenge 1986), SUBDOSA (Strenge, Watson, and Houston 1975), KRONIC (Strenge and Watson 1973), and ISOSHLD (Engel, Greenborg, and Hendrickson 1966). A user-friendly, interactive, driver program was developed to consolidate all code input and output requirements. The resultant codes are small enough to operate on a personal computer. All codes and data bases developed in the PNL project have been thoroughly peer-reviewed, tested, and documented.

The goal of this project was to develop a new generation of multipurpose mathematical models and computer programs. The resultant codes will be used for retrospective calculations of potential radiation doses resulting from routine Hanford emissions by groups within PNL, as well as by other Hanford contractors. The codes will also be used for prospective dose calculations for purposes such as siting facilities, environmental impact statements (EISs), and safety analysis reports (SARs). It was important that each user group provide input to the design of the proposed codes.

A task was initiated to define the system design requirements of the proposed codes. A committee of representatives from potential user groups was formed under the guidelines of the Hanford Dose Overview Program.

Recommendations of this group were incorporated with those of prospective PNL users to help define the needed capabilities.

Based on the recommendations developed, the relationships between radionuclide release, flux, concentration, and uptake were formulated. The pathways included are internal exposure through inhalation, crop ingestion, animal product ingestion, water consumption, and aquatic food product ingestion; and external exposure through air submersion, water immersion (swimming), and contaminated ground surfaces and objects. The equations are used as the basis for subsequent computerized implementation.

Solving the equations depends on the values of the transfer parameters used. Existing libraries of radionuclide-specific factors existed but had not been reviewed/updated for nearly 10 years. A literature review was performed of the most recent pertinent information with emphasis on Hanford-specific data. Parameters investigated included soil-to-plant concentration ratios (CRs), plant-to-animal product CRs, aquatic bioaccumulation factors, resuspension rates and resuspension factors (including mass loading rates), and selected specific-activity models (e.g., hydrogen-3 and carbon-14).

The most flexible structure for a new generation of environmental dosimetry models is similar to that shown as Figure 1.1. The major structural components are an environmental transport and human exposure module (incorporating most of the existing models) coupled to an internal dosimetry module. For convenience and ease of use, these are controlled by an interactive "driver" program. Most data inputs are through calls to data files (not shown in Figure 1.1).

1.2 QUALITY ASSURANCE ISSUES

The GENII package of codes was developed under a stringent QA plan based on the American National Standards Institute (ANSI) standard NQA-1 (ASME 1986) as implemented in the PNL Quality Assurance Manual PNL-MA-70.[a] All steps of the code development have been documented and tested. Extensive

---

(a) Procedures for Quality Assurance Program, PNL-MA-70, is a controlled document used internally at PNL. Information regarding the manual may be obtained from the Pacific Northwest Laboratory, Richland, Washington.

hand calculations have been performed and are available for review. An external peer review of the internal dosimetry portions of the code was held in Richland, Washington, the week of September 14, 1987. A second external review of the entire package was held in Richland the week of February 1, 1988. Copies of the reports issued by these reviewers are available. Recommendations of these review committees were then incorporated into the final product.

2.0 CONCEPTS IN ENVIRONMENTAL DOSIMETRY

Some basic interrelated concepts were used to develop the GENII code system, some explicitly labeled and some implicitly used. These concepts of "Exposure Scenario Definition" and "Exposure Pathways" are described in this section. Understanding the approaches taken to allow flexible scenario definition will aid the user in applying the codes. The general concepts of "scenarios" are described first, followed by description of the environmental pathways included in GENII.

2.1 SCENARIO DEFINITION

A "scenario" is a conceptual model that calculates patterns of human activity corresponding to actions, events, and processes that result in radiation exposure to individuals or groups of people. The GENII code package can evaluate doses resulting from two general scenario types: far-field and near-field. A far-field scenario is defined as one that determines the impact of a particular release of radioactive material into a wide environment, such as doses from releases from a stack to individuals or populations downwind. In a near-field scenario, the focus is on the doses an individual could receive at a particular location as a result of initial contamination or external sources, i.e., buried waste or contaminated soil. In a near-field scenario, contamination levels in specific environmental media may be known. A far-field scenario focuses outward from a source, and a near-field scenario focuses in toward a receptor. Of course, the two types are not mutually exclusive. Some doses to individuals from remote sources can be calculated as either far- or near-field with the same result. Specific examples of common types of far-field and near-field scenarios are given below.

2.1.1 Far-Field Scenarios

A number of commonly encountered scenarios may be classed as far-field. The following are types of releases of radioactive materials into the wider environment:

- chronic atmospheric releases - prospective or retrospective doses to individuals or populations at specified distances and directions

from the radioactive source, via submersion, inhalation, deposition groundshine, and food pathways. This class of scenario is commonly used for demonstrating compliance to regulations that involve emission sources.

- acute atmospheric releases - prospective or retrospective doses to individuals or populations at specified distances and directions from an acute radioactive release, via submersion, inhalation, deposition groundshine, and food pathways. This class of scenario is often used in SARs or EISs.
- chronic surface water releases - prospective or retrospective doses to individuals and populations at specified distances downstream of a release point via swimming, boating, shoreline, drinking water, aquatic foods, irrigated terrestrial foods and animal products, soil contaminated via irrigation, and other pathways associated with liquid releases. This class of scenario is also often encountered during the demonstration of compliance with regulations.
- acute surface water releases - prospective or retrospective doses to individuals and populations at specified distances downstream of a release point via swimming, boating, shoreline, drinking water, aquatic foods, irrigated terrestrial foods and animal products, soil contaminated via irrigation, and other pathways associated with acute liquid releases. This class of scenario is also associated with SARs and EISs.

2.1.2 Near-Field Scenarios

Most other types of scenarios may be considered to be near-field. Examples are:

- initial surface contamination - individual doses resulting from contact with contaminated soil or surfaces via direct contact, resuspension, or crop uptake. Calculations of this nature can be used to analyze the impact of spills or remedial actions.
- initial subsurface contamination - individual doses resulting from contact with contaminated soil or surfaces via direct contact,

resuspension, or crop uptake. The surface soil may be contaminated via manual redistribution of the material or through biotic transport. Calculations of this nature can be used to analyze the impacts of waste management options. Often a time delay may be included to account for radioactive decay of the source.

- ground water contamination - prospective or retrospective doses to individuals and populations from a given water concentration via drinking water, irrigated terrestrial foods and animal products, soil contaminated via irrigation, and other pathways associated with liquid releases. This class of scenario is also often used in demonstrating compliance with regulations.
- cumulative effects - prospective calculations combining initial soil contamination with additional contributions from an external atmospheric or liquid source. This type of calculation is representative of how near-field and far-field calculations can conceptually be combined.

As seen in the above examples, the near-field and far-field scenarios are not necessarily mutually exclusive, and in some instances either approach may be used in defining them. An interactive user interface is provided with the GENII package to aid the user in scenario definition.

2.2 EXPOSURE PATHWAYS

Potential routes through which people may be exposed to radionuclides or radiation are called "exposure pathways." Examples of general pathways are external exposure, inhalation, and ingestion. The pathways are defined depending on the ways people could be exposed for a given circumstance. In this way, an appropriate collection of defined pathways can also be considered as the definition of an "exposure scenario." Because a conceptualization of the types of exposure must be made before the pathways can be fully defined, "scenarios" are usually defined before the parameters are selected for the "pathways."

The various exposure pathways available to users of the GENII package are illustrated in Figure 2.1. This logic diagram shows how known or assumed

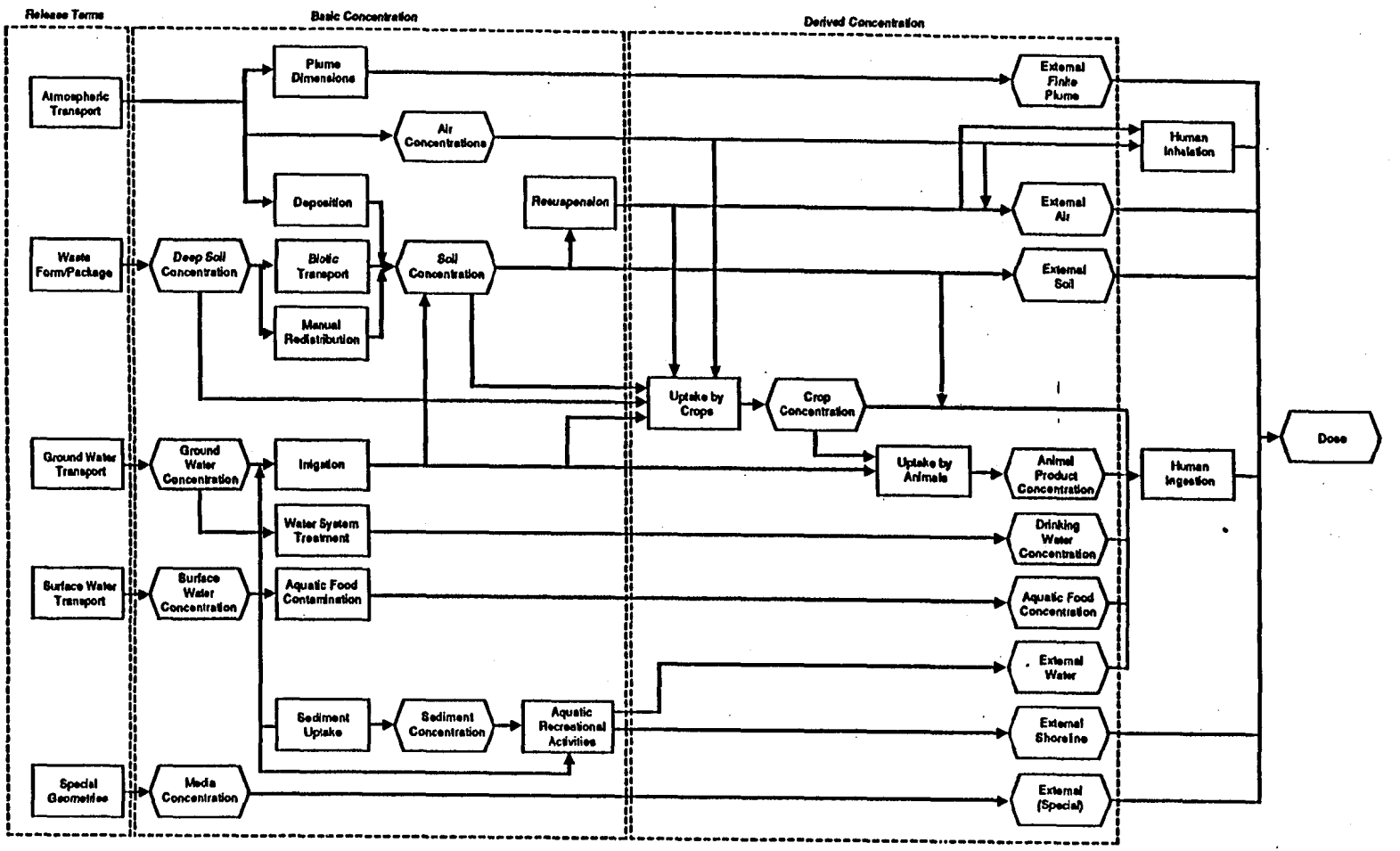

FIGURE 2.1. Available Exposure Pathways in the GENII Package

values may be propagated through defined steps to estimate radiation doses. In the GENII formulation, data regarding the radioactive release or radioactive contamination levels may be input to the calculations at different points in the calculation. These are represented on the diagram as hexagonal boxes.

In most calculations, the known quantity is generally the release quantity, designated the "Release Terms" in Figure 2.1. These terms may take the form of activity, or activity per unit time, released into the transport media of air, surface water, ground water, or soil. They are converted via appropriate models to concentrations in the corresponding media (if the basic media concentration is known, it may be input and the transport step omitted). The processes represented by square boxes in Figure 2.1 are simulated, resulting in the "Derived Concentrations." Again, if the Derived Concentrations are known, the earlier processes may be overridden. Finally, the human exposure parameters are factored in, and the dose is estimated.

To optimize flexibility, the capability to input precalculated values of atmospheric dispersion, ground water concentration, and surface water concentration has been included in the GENII package. In this way, if the simple methods incorporated in the GENII package are insufficient for a particular calculation, more sophisticated results may be achieved with minimal effort.

3.0 CODE FUNCTIONAL DESCRIPTIONS

The GENII system is composed of seven interrelated computer codes and their associated data libraries, as illustrated in Figure 1.1. The connection between the codes is through data transfer files. The output of one code is stored in a file that can be read by the next code in the system. Depending on the desired usage, the experienced user may also stop the process and edit the intermediate data transfer files to obtain specific information on the processes occurring or on intermediate results. Input and output details for each of the codes are provided in the Users' Manual, Volume 2 of the GENII documentation.

Section 3.0 describes the general functions and capabilities of each of the separate codes.

3.1 APPRENTICE

Detailed input to the GENII system consists of a multi-page data file containing the parameterized scenario description, radionuclide inventory data, and control parameters desired for a particular calculation. The APPRENTICE code is a not-quite-expert system that helps the user, through a series of interactive menus and questions, to prepare a text input file for the environmental dosimetry programs. In addition, APPRENTICE prepares a batch processing file to manage the file handling needed to control the operations of subsequent codes and prepare an output report.

Novice users will appreciate the pop-up help screens that are available in all sections of the program, the extensive logic that requests only pertinent input, default values available for all parameters, reasonable parameter value ranges, error checking for scenario incompatibilities, and checking for validity of file names. Experienced users will find that APPRENTICE has been constructed so that tutorial information does not get in the way of efficient scenario preparation. Pull-down menus allow the user substantial flexibility to modify a scenario under construction. The user can create multiple input files to execute under the control of a single batch-processing file that is generated by APPRENTICE in a relatively unobtrusive manner. File management is available within APPRENTICE; the

user may view, copy, and rename files, as well as make subdirectories and change default paths.

3.2 ENVIN

The ENVIN module of the GENII package controls the reading of the input files optionally prepared by APPRENTICE and organizes the input for optimal use in the following environmental transport and exposure module, ENV. The ENVIN code interprets the basic input, reads the basic GENII data libraries and other optional input files, and organizes the input into sequential segments based on radionuclide decay chains.

Input to ENVIN occurs by means of a standardized file containing scenario, control, and inventory parameters. Radionuclide inventories can be put in as functions of release to air or water, concentration in basic environmental media (air, soil, or water), or concentration in foods. If certain atmospheric dispersion options have been selected, this module can generate tables of atmospheric dispersion parameters (X/Q) that will be used in later calculations. If the finite plume air submersion option is requested in addition to the atmospheric dispersion calculations, preliminary energy-dependent finite plume dose factors are also prepared. ENVIN prepares the data transfer files that are used as input by the ENV module. It also puts out the first portion of the calculation documentation - the run input parameters report.

3.3 ENV

The ENV module is the portion of the GENII package that calculates the environmental transfer, uptake, and human exposure to radionuclides that result from the chosen scenario for the defined source term. The code reads the input files from ENVIN, and then for each radionuclide chain sequentially performs the precalculations to establish the conditions at the start of the exposure scenario. Environmental concentrations of radionuclides are established at the beginning of the scenario by assuming decay of pre-existing sources, considering biotic transport of existing subsurface contamination, and defining soil contamination from continuing atmospheric or irrigation depositions. Then, for each year of postulated exposure, the code estimates

air, surface soil, deep soil, and ground and surface water concentrations of each radionuclide in the chain. Human exposures and intakes of each radionuclide are calculated for the pathways of external exposure from finite or infinite atmospheric plumes; inhalation; external exposure from contaminated soil, sediments, and water; external exposure from special geometries; and internal exposures from consumption of terrestrial foods, aquatic foods, drinking water, animal products, and inadvertent intake of soil.

The intermediate information on annual media concentrations and intake rates are written to data transfer files. While these may be accessed directly, they are usually used as the input to the DOSE module of GENII.

3.4 DOSE

The DOSE module of the GENII package reads the annual intake and exposure rates defined by the ENV module and converts them to radiation dose. The calculation of external dose is done with precalculated factors from the EXTDF module, and the calculation of internal dose is done with precalculated factors from the INTDF module.

Radiation dose is proportional to the quantity of energy deposited per unit mass of irradiated tissue. The total "absorbed dose" is reported in units of "rad" (100 ergs/g) or, as in the International System of Units, commonly known as SI units, "gray," abbreviated "Gy" (1 J/kg). This is normalized to relative biological effect, depending on the type of radiation, in "dose equivalent" units of "rem" or "sievert" (Sv) in SI units. The length of time and mode of exposure designates the type of dose calculated.

ICRP 26 states that special considerations must be made "when the exposure is extended in time." The report defines "dose-equivalent commitment" to be the time integral of the dose rate in a given organ or tissue. The report then further defines the "committed dose equivalent" to be the dose that results " from a single intake of radioactive material into the body. This quantity, which may be considered to be a special case of dose-equivalent commitment, is the dose equivalent that will be accumulated over 50 years . . . following the intake" (i.e., a 50-year dose commitment). For convenience, a dose equivalent is usually simply called a "dose" (ICRP 1977, p. 6).

The types of doses calculated in the DOSE module include:

1. One-Year Dose - the population or individual dose that results from one year of exposure (external plus internal). This is the dose currently used for comparison with occupational exposure standards and the one originally used for comparison with public standards.

   The one-year dose is now used at Hanford as a measure of potential short-term impact from accidental releases during waste management operations. This situation is illustrated in Figure 3.1, where "Intake" shows a constant rate of radionuclide intake (through inhalation and/or ingestion) and "Dose Rate" shows the resulting dose rate to a tissue or organ. The integral of the dose rate over one year is the one-year dose (i.e., the area under the dose-rate curve).

2. Committed Dose - the population or individual dose that results from one year of external and internal exposure plus the extended internal dose that results from the one-year intake (ingestion plus inhalation). Normally, a 50- or 70-year dose-commitment period is used (i.e., the one-year intake period plus 49 or 69 years). This dose is the one currently being used by most of those who calculate public doses.

   The committed dose is used as a measure of the potential, longer-term impact of accidents and routine releases. This situation is illustrated in Figure 3.2, where "Intake" is the same as in Figure 3.1 and shows a constant rate of radionuclide intake over a one-year period. "Dose Rate" in Figure 3.2 shows the resulting dose rate, and the initial portion of the curve is identical to that of Figure 3.1. However, the residual radioactive material left in the body continues to produce a dose after the initial one-year period ends. The integral of the dose rate over 50 or 70 years gives the committed dose that results from one year of intake.

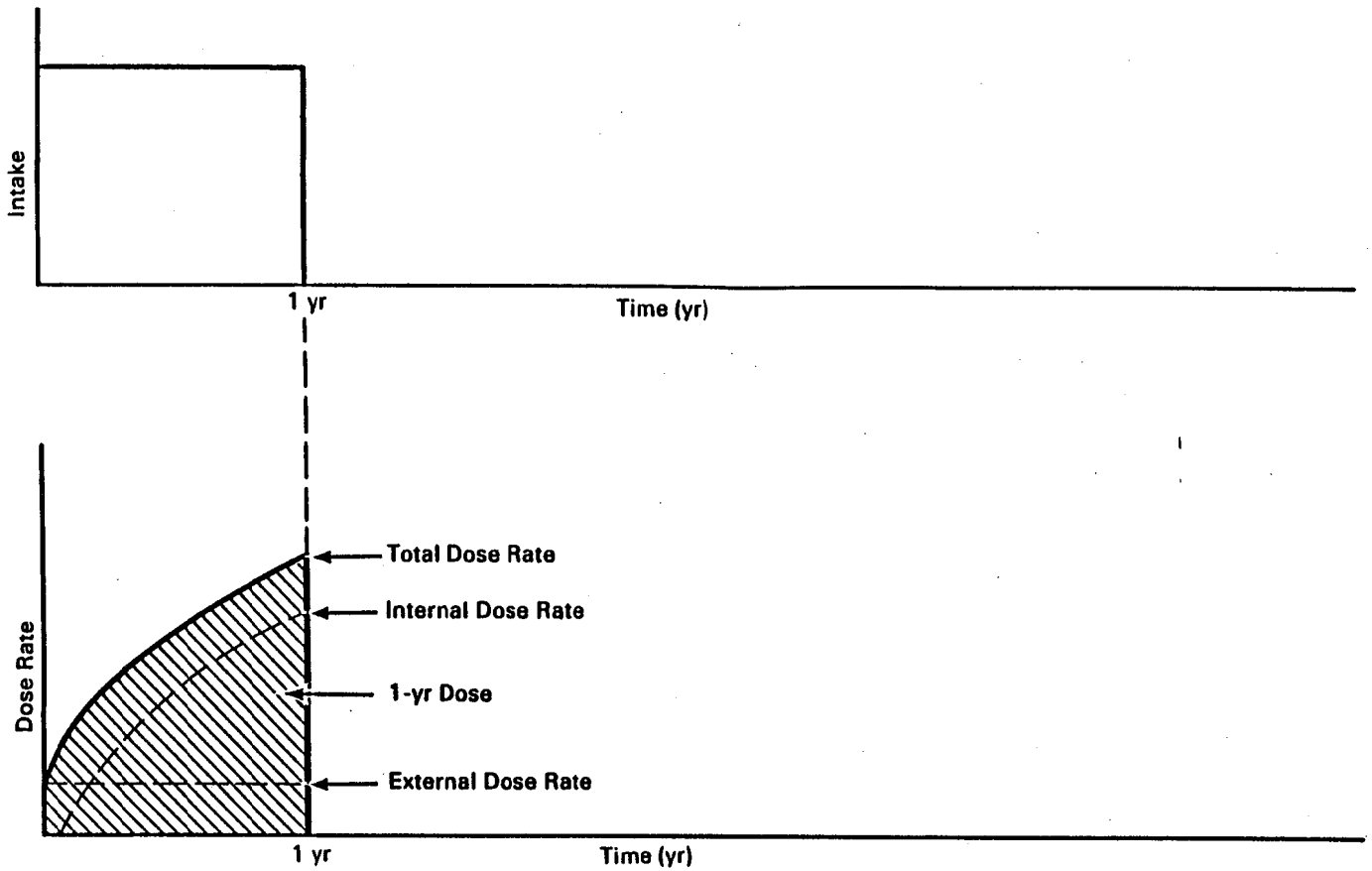

FIGURE 3.1. Situation Showing Constant Rate of Radionuclide Intake and Resulting One-Year Dose Rate to Tissue or Organ

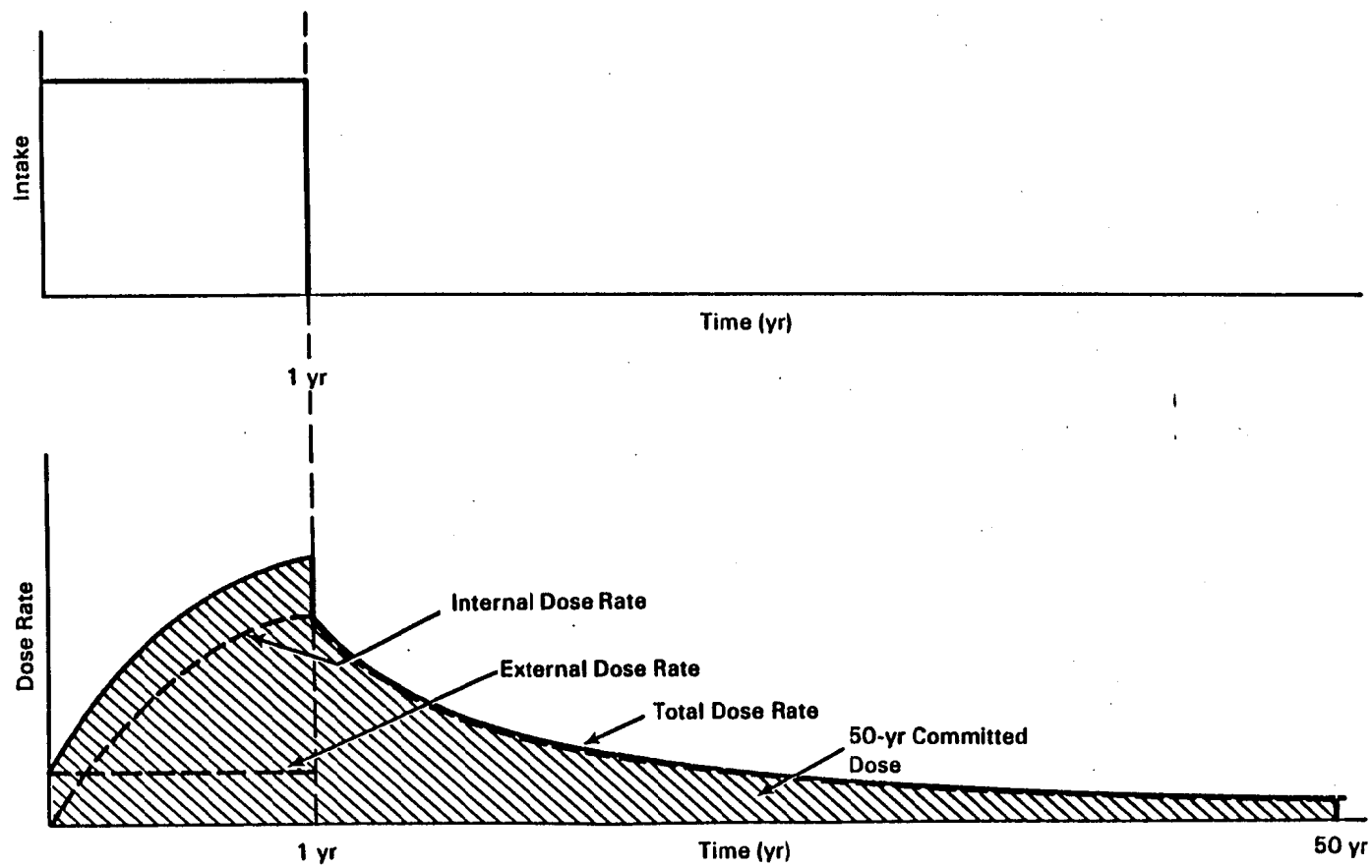

FIGURE 3.2. Situation Showing Committed Dose from One-Year Internal and External Exposure Plus Extended Internal Dose

3. Cumulative Dose - the population or individual lifetime dose (50- or 70-year) that results from external exposure plus intake via ingestion and inhalation. This includes the dose from radionuclides that accumulate (and physically decay) in the environment during the exposure period. The cumulative dose is used to assess the total potential impacts from operations that have chronic releases over a period of several years or from significant deposition resulting from accidents.

   Some parameters can be varied in calculating cumulative dose. One example used in the Hanford annual surveillance reports between CY 1982 and CY 1987 (Jaquish 1987) is a one-year release of radionuclides with resulting residual environmental contamination. The resulting rate of radionuclide intake is illustrated in Figure 3.3, "Intake." The residual environmentally deposited radionuclides decrease by physical decay. The resulting dose rate is illustrated in Figure 3.3, "Dose Rate."

   A more complicated example, shown in Figure 3.4, is of a release that continues for more than one year. Scenarios of this sort are routinely used in prospective estimates of the total potential impact of a facility (e.g., environmental impact statements or EISs).

4. Maximum Annual Dose - the largest annual dose that could occur during a specific period (e.g., 50 or 70 years). This calculation accounts for each year's external exposure plus the internal dose from radionuclides taken in during the year of interest and all previous years. The maximum annual dose is identified by including all organ doses. This type of dose estimate corresponds most closely to the existing annual dose limits for occupational and public exposure.

   The maximum annual dose is calculated for scenarios that consider human intrusion or long-term casual exposure to disposed wastes, for EISs, and for the allowable residual contamination level (ARCL) evaluations used for decommissioning operations. The maximum

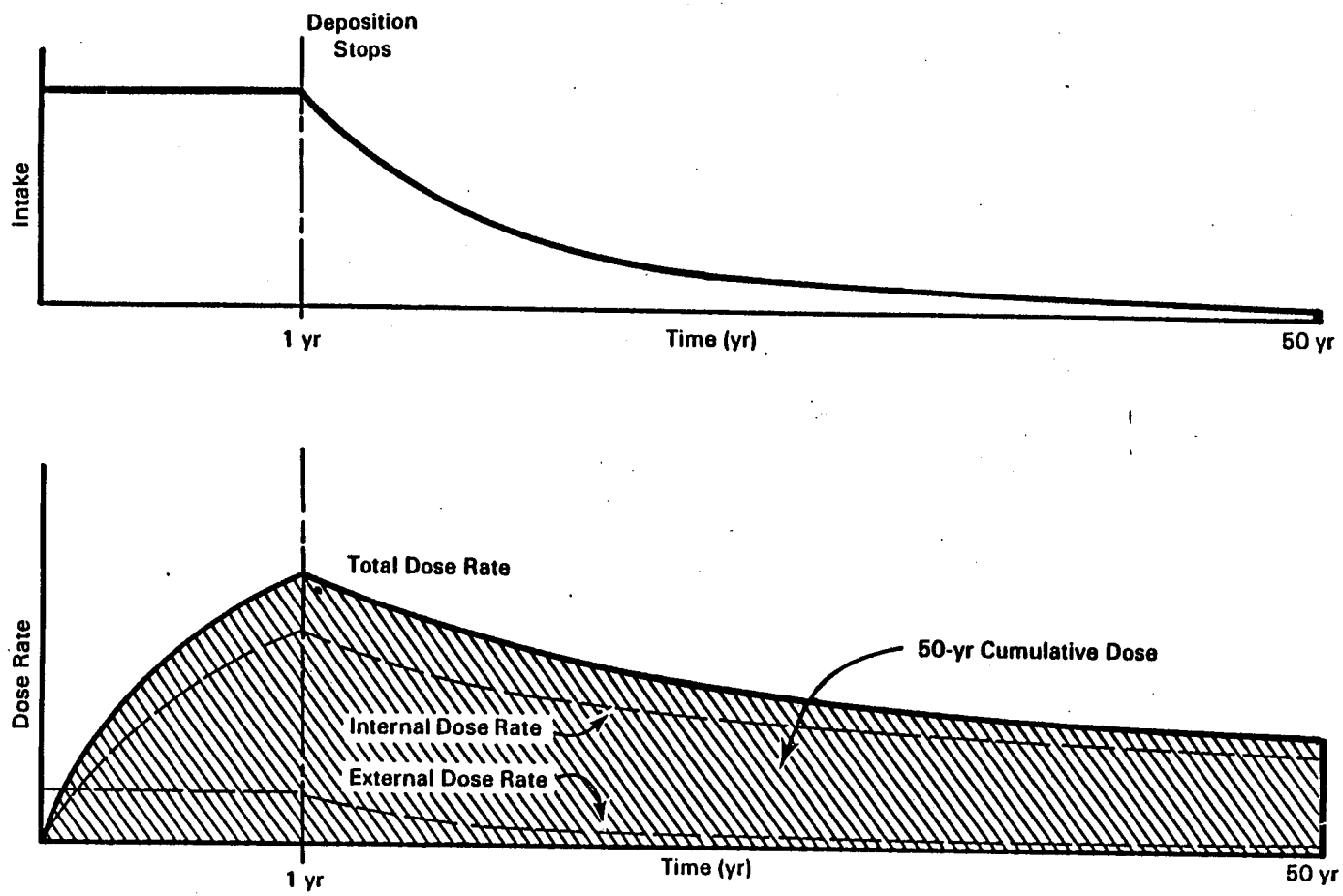

FIGURE 3.3. Situation Showing Cumulative Dose Resulting from Residual Environmental Contamination

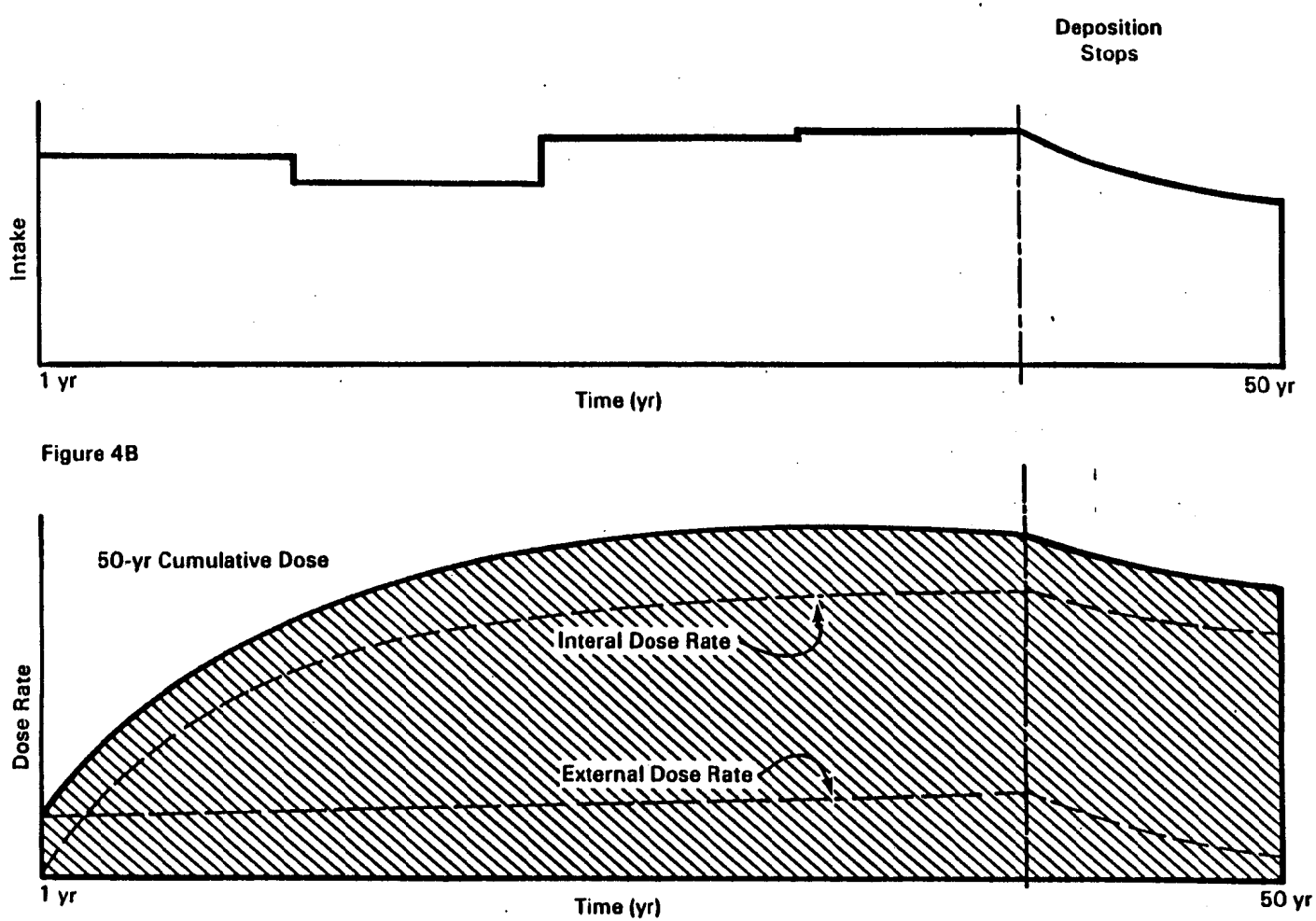

FIGURE 3.4. Situation Showing Radionuclide Release That Continues for More Than One Year

annual dose is calculated by assuming an initial concentration of radionuclides in soil, concrete, piping, and other materials. These concentrations are reduced over time by physical decay. The annual dose rate to the exposed individual from internally deposited radionuclides increases until the body burden reaches equilibrium with the environmental levels of the physically decaying radionuclides. The year that equilibrium occurs usually corresponds to the maximum dose rate. The maximum-dose-rate year may not occur until many years after the initial exposure. This situation is illustrated in Figure 3.5.

Because annual dose rates are calculated, the dose conversion factors from ICRP 30 are not usable; they are only for 50-year committed doses following an intake. The 50-year dose conversion factors cannot simply be divided by 50 to produce an "annual dose." The ICRP 30 factors are integrals similar to those illustrated in Figure 3.2, depending on the effective half time of the radionuclides in the body (ICRP 1979-1982).

The computer code for calculating the internal dose factors, INTDF, does not itself provide these type of doses. Instead, it is used to calculate the incremental organ doses for each year following an initial intake. The output is the incremental dose to each organ, which is then used in DOSE to assemble annual doses, dose commitments, and accumulated doses. The method by which these doses are assembled is illustrated in Figure 3.6. This technique minimizes the number of calculations needed from the internal dosimetry module.

Effective dose equivalent (EDE) calculated in DOSE is calculated in the manner presented in ICRP 26 (1977). That is

$$EDE = \sum_t w_t H_t \qquad (3.4.1)$$

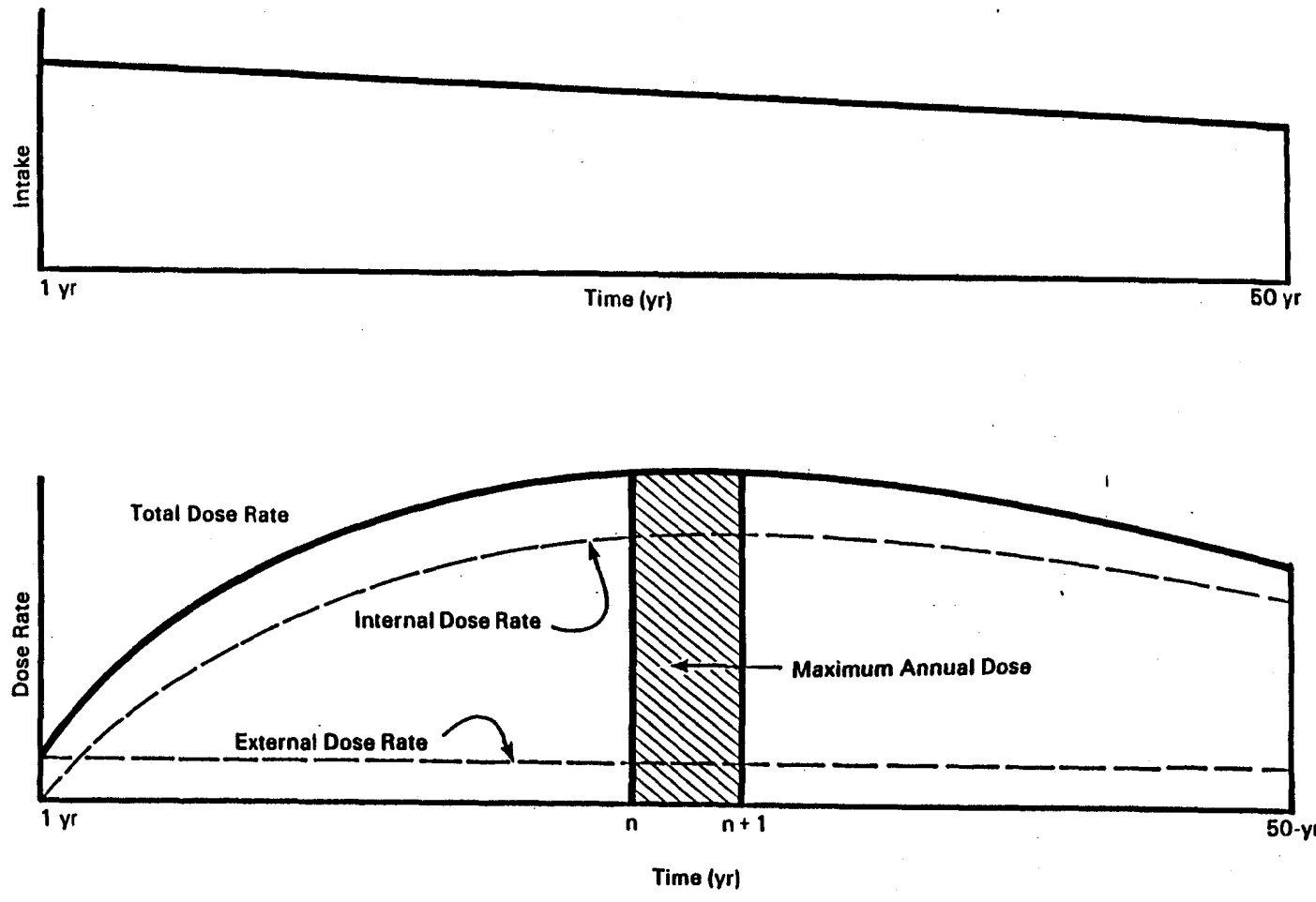

FIGURE 3.5. Situation Showing Maximum Annual Dose from Contaminating Exposure

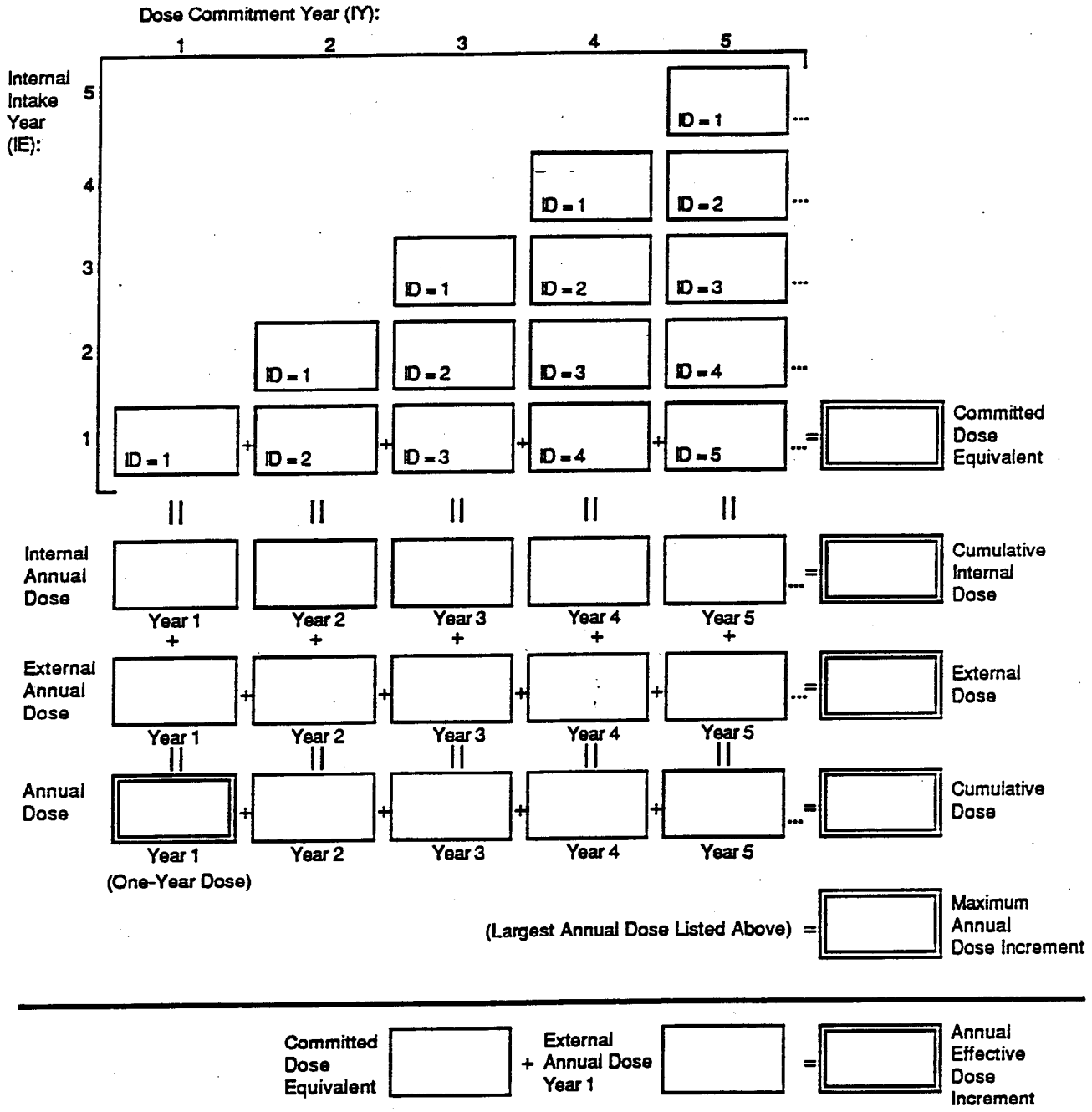

FIGURE 3.6. Conceptual Matrix Showing Calculation of Annual, Committed, and Cumulative Doses

The weighting factors (w_t) used are also those of the ICRP, given in ICRP 26 (1977) as:

Gonads	0.25
Breast	0.15
Red Bone Marrow	0.12
Lung	0.12
Thyroid	0.03
Bone Surfaces	0.03
Remainder	0.30

where the "remainder" is applied to the five other organs having the highest dose, with a weighting of 0.06 for each.

DOSE also prepares the remainder of the normal output report of doses, optional doses by pathway and by radionuclide. This output is combined with that from the ENVIN routine to comprise the total routine reports.

3.5 EXTDF

The EXTDF module is incorporated into the GENII package to allow easy and uniform calculation of external dose-rate factors for submersion in an infinite cloud of radioactive materials, immersion in contaminated water, and direct exposure to plane or slab sources of contamination. The EXTDF capability also allows for the creation of special dose-rate factors for sources of other geometries in the GENII system. The EXTDF code is a modification and enhancement of the well-known shielding code ISOSHLD (Engel, Greenborg, and Hendrickson 1966). The portion of ISOSHLD that can be used to calculate source strength from reactor fission fuel (the RIBD routines) has been eliminated. The data libraries of radionuclide decay information and gamma and beta yields have been updated from the DRALIST compilation of Kocher (1981b).

The ISOSHLD code uses a point kernel integration technique; i.e., the dose at the exposure point is the contribution from a large number of individual point sources. A numerical integration is carried out over the source volume to obtain the total dose. For a limited number of geometries, an analytical solution is used. The geometries available in the EXTDF are the standard 14 available in ISOSHLD, as listed in Table 3.1.

TABLE 3.1. Available EXTDF Geometries

Source Configuration	Shield Configuration
Point	Slab
Line	Slab
Spherical	Spherical
Spherical	Slab
Truncated Cone	Slab
Infinite Plane	Slab
Infinite Slab	Slab
Disc	Slab
Cylindrical (side)	Cylindrical
Cylindrical (side)	Slab
Cylindrical (side)	Cylindrical and Slab
Cylindrical (end)	Slab
Rectangular	Slab
Annular Cylinder	Cylindrical and Slab

EXTDF is limited to calculating normalized dose rate factors. It is not available for routine shielding calculations because it automatically reads and computes factors for unit inventories of all radionuclides in the GENII master nuclide library.

3.6 INTDF

The INTDF code is used to make estimates of the dose equivalents in a number of target organs from the activity in a given source organ. For each type of radiation i, the dose equivalent H_i in target organ T from radionuclide j in source organ S is the product of two factors:

- the total number of nuclear transformations of radionuclide j in organ S over the period of interest following intake
- the energy absorbed per gram in target organ T, suitably modified for the quality factor, from radiation of type i per transformation of radionuclide j in source organ S. In other words, for each radiation of type i from radionuclide j.

$$H(T \leftarrow S)_i = U_S \cdot 1.6 \cdot 10^{-13}\ SEE(T \leftarrow S)_i \cdot 10^3 \qquad (3.6.1)$$

where U_S = the number of transformations of radionuclide, j, in source organ, S, over the period of integration following intake of the radionuclide

$1.6 \cdot 10^{-13}$ = the number of joules in 1 MeV

$SEE(T \leftarrow S)_i$ (in MeV g^{-1} per transformation) = the specific effective energy for radiation type i, suitably modified by quality factor, absorbed in T from each transformation in S

10^3 = the conversion factor from g^{-1} to kg^{-1}.

In general, for the intake of any mixture of radionuclides, i.e. parent with daughters, the dose in target organ T from radioactivity in several different sources S is given by

$$H = 1.6 \cdot 10^{-10} \sum_s \sum_j [U_s \sum_i SEE(T \leftarrow S)_i]_j \qquad (3.6.2)$$

Most of the effort expended in the INTDF code is in calculating the integrated retentions of parent and daughter radionuclides in the source organs. Specific Effective Energies (SEE(T ← S)) for Reference Man (ICRP 1975) were obtained from Oak Ridge National Laboratory (ORNL) on magnetic tape.

The number of transformations of a radionuclide in any organ or tissue of the body during any period of time is the time integral of activity of the radionuclide within that organ or tissue over the stated period of time, referred to as U_S in the above equations. The function describing uptake and retention of a radionuclide in a body tissue following its ingestion or inhalation may be very complex. With certain exceptions (e.g., alkaline earth radionuclides in bone or iodine in the thyroid), the models used for this effort are based on the assumption that the body consists of a number of separate compartments. Any organ or tissue may comprise one or a number of compartments. Loss of the radionuclide from any compartment is assumed to be governed by first order kinetics. Therefore, the retention of any element in any organ or tissue will usually be described by either a single exponential term or the sum of a number of exponential terms.

The compartment model used for the respiratory system is that of the ICRP Task Group on Lung Dynamics (ICRP 1966). The Task Group Lung Model (TGLM) has been slightly revised by Johnson and Carver (1981) to simplify the differential equations describing the retention of material in the tracheobronchial compartment, which is the formulation currently used.

The compartment model of the gastrointestinal tract (GI tract) is based on the model developed by Eve (1966). This is the same model used by ICRP 30 (1979-1982) and Johnson and Carver (1981). The GI tract is assumed to consist of four sections, the stomach, small intestine, upper large intestine, and lower large intestine.

After a radionuclide has been inhaled or ingested it will be translocated to the body fluids at a rate determined by the rate constants for the different compartments in the respiratory and gastrointestinal systems and by the radioactive decay constant of the radionuclide. Its translocation thereafter to the compartments representing the various organs and tissues of the body is represented in the model by a transfer compartment, which is assumed to be cleared by first order kinetics with a half time of 6 hours, unless specifically given a different rate constant in the metabolic data. Transformations occurring in the transfer compartment are assumed to be uniformly distributed throughout the body.

3.7 DITTY

The codes described above are intended to consider the environmental consequences in the near term (approximately 0 to 100 years) following releases to the environment. Such programs are useful for most nuclear fuel cycle facilities, except nuclear waste disposal sites, which may have long-term impacts. The long transport times through waste barriers and ground water aquifers require that longer time periods be considered. The computer code DITTY was developed to calculate the total population exposure over long time periods (Napier, Peloquin, and Strenge 1986). This code was incorporated, with only minor revisions, into the GENII package to provide the necessary capability to evaluate long-term releases.

Total population exposure is dependent on many parameters that are subject to large variations over thousands of years. Therefore, the user must

realize that the calculated results from use of DITTY are only estimates and are limited in accuracy by the validity of the input assumptions. The time variant input parameters include 1) air and water source terms, 2) atmospheric dispersion patterns, and 3) exposed population.

Source terms of DITTY may be defined for releases to the atmosphere or to water. Releases to water may be to wells or surface water via ground water. The actual release rates are specified in an input file as the curies per year released for selected years following time zero for the calculation. One such data set is defined for each radionuclide of interest. Sophisticated ground water transport programs are generally used to determine the time variant release rate following transport from a geologic repository to the environmental access point (well or surface water). A similar definition of release rate as a function of time is needed for atmospheric releases.

For releases to the atmosphere, estimates of dispersion patterns are needed to determine total exposure of the regional population. The purpose of the dispersion calculation is to provide estimates of ground-level air concentrations of released radioactivity as a function of distance and direction from the release location. The downwind air concentrations are related back to the release rate by use of "dispersion factors," which may be either supplied as input to the program or calculated by the program. When the program calculates the dispersion factors, meteorological data must be provided in the form of joint frequency of occurrence of windspeed, wind direction, and atmospheric stability. The dispersion calculation may be performed external to the program with the results entered through input, or joint frequency meteorological data may be supplied and dispersion factors calculated as a function of distance and direction. A straight-line crosswind-averaged Gaussian plume model is used for the dispersion calculation.

The regional population is defined for airborne and waterborne pathways as a function of time. For airborne pathways, the population is defined as a function of distance and direction corresponding to the locations for which dispersion factors are given or calculated. A population-weighted dispersion factor is calculated as the sum of the product of population and dispersion factor for each location. Alternatively, the population-weighted factor may be calculated external to the program and supplied as input.

The time frame for the calculation is any 10,000-year period. This period is broken into 143 periods of 70 years each. The average release in each of these periods is calculated from source-term data provided, and the total population dose to selected organs is determined for each period, as illustrated in Figure 3.7. The activity present during any period is the sum of material released during that period (uniformly released over 70 years) and residual material in the environment from releases in previous periods. The dose is calculated for all contributing pathways of exposure, including external exposure, inhalation, and ingestion of contaminated water and foods.

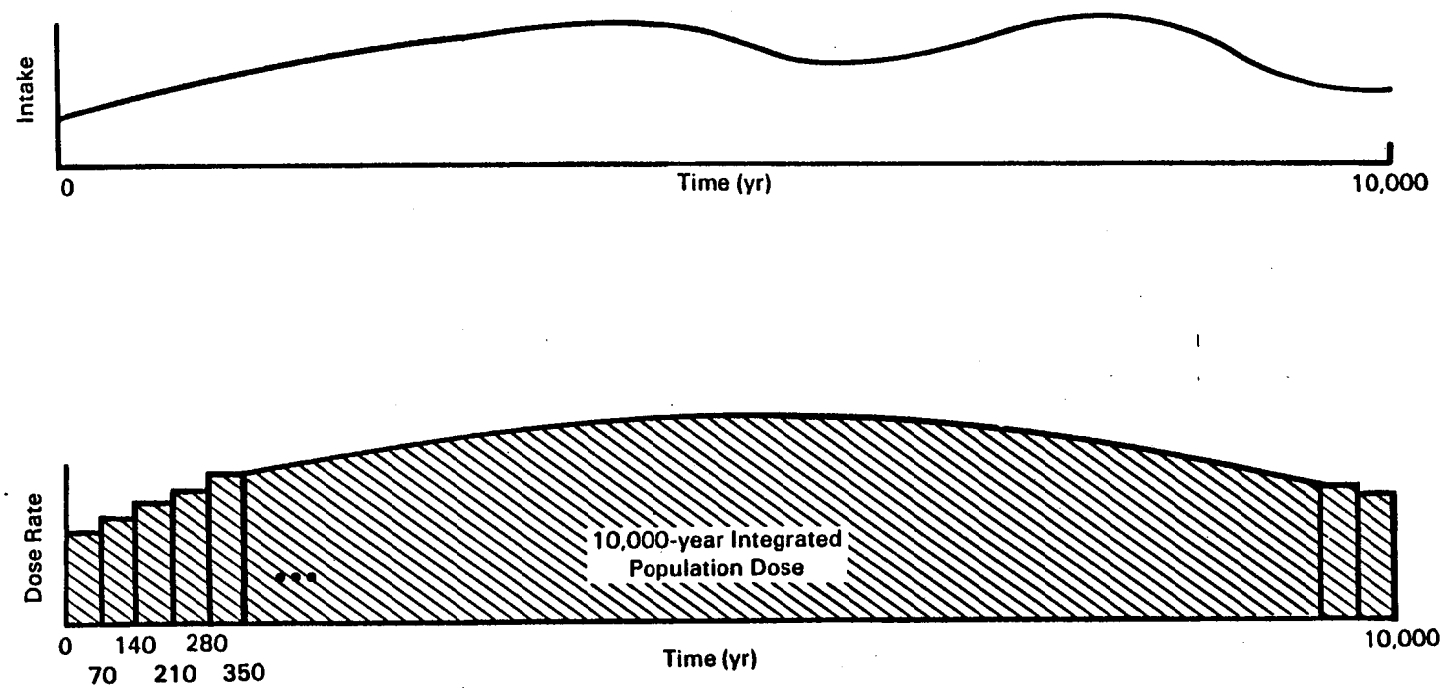

FIGURE 3.7. Calculational Scheme for Long-Term Integrated Population Doses

4.0 MATHEMATICAL REPRESENTATIONS

Section 4.0 describes the mathematical models and algorithms used in the GENII package. It is divided into two broad sections: the equations used in the short-term analyses (i.e., those for the core GENII package) and the equations used in the long-term analyses (those for the DITTY code). The first six subsections deal with the core GENII modules of internal dosimetry, external dosimetry, atmospheric dispersion, air submersion, aquatic pathways, and terrestrial pathways. The seventh subsection is, to some extent, a restating of the previous subsections in the nomenclature of the long-term calculation.

4.1 INTERNAL DOSIMETRY

For this work, estimates are made of the dose equivalents in a number of target organs from the activity in a given source organ. For each type of radiation i, the dose equivalent H_i in target organ T from radionuclide j in source organ S is the product of two factors:

- the total number of nuclear transformations of radionuclide j in organ S over the period of interest following intake
- the energy absorbed per gram in target organ T, suitably modified for the quality factor, from radiation of type i per transformation of radionuclide j in source organ S.

The number of nuclear transformations of the radionuclide in the body is a critical factor in the dose estimate. In order to implement the ICRP 30 type of calculations (ICRP 1979-1982), we have developed the INTDF code to solve this initial-value problem by means of a coupled set of differential equations.

4.1.1 The General Model

The complete compartment model or the general model used in most cases is illustrated in Figure 4.1. The TGLM lung model (ICRP 1966) and the Eve GI-tract model (Eve 1966) are connected to the transfer compartment. Each organ or tissue of deposition is assumed to consist of from one to four compartments, and from each of these compartments the radionuclide is

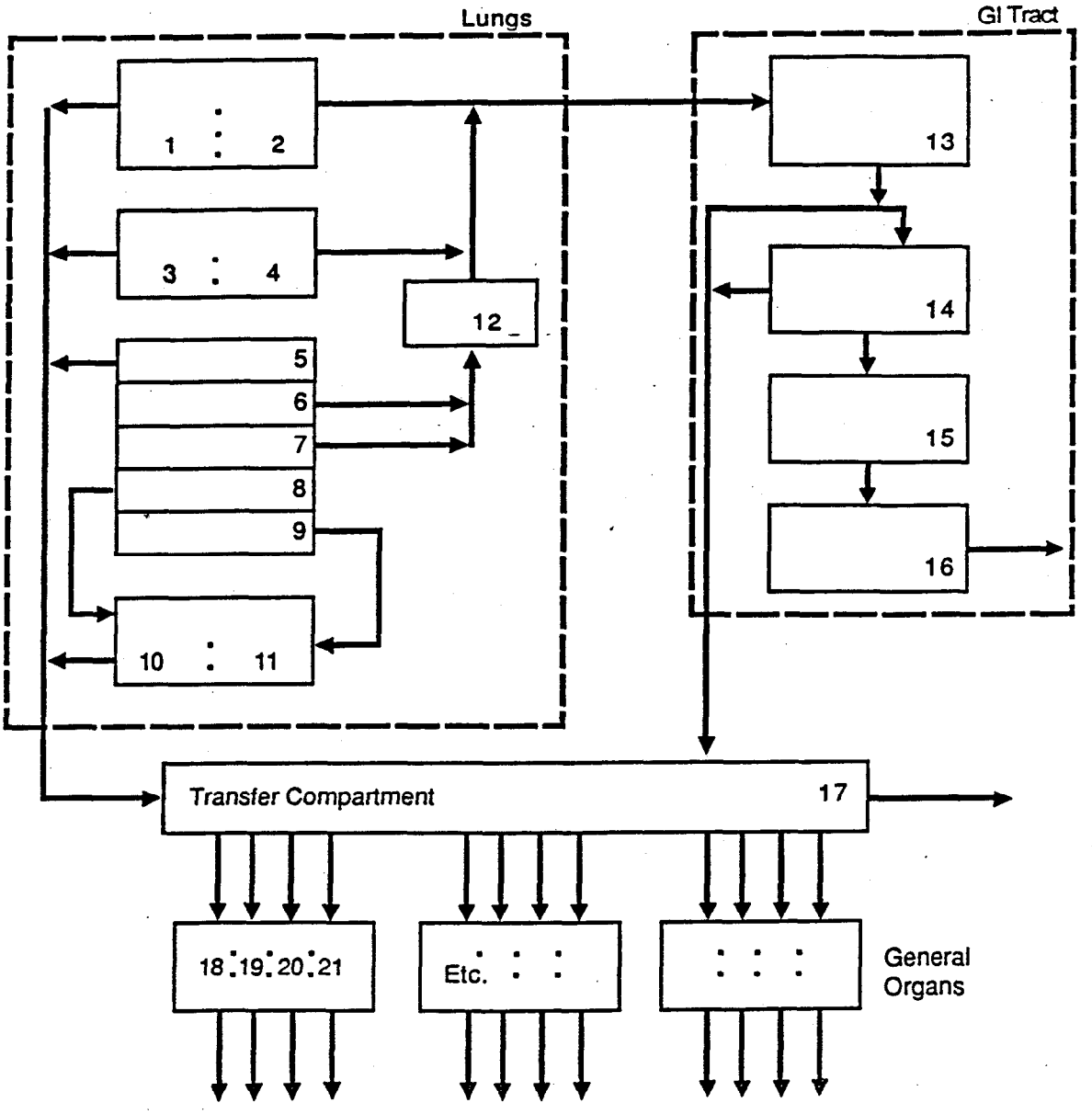

FIGURE 4.1. The General Model

translocated at an appropriate rate to the excretion pathways. For simplicity, it is assumed in the general model that no feedback to the transfer compartment occurs either from the routes of excretion or from the organ compartments. Special models for which this is not the case are described as in the following subsections.

The differential equations that govern the transport of materials through the compartments illustrated in Figure 4.1 are listed in Table 4.1. The parameters used in Table 4.1 are defined as:

Y_{ij} = the quantity of radionuclide j in compartment i as a function of time, Bq. For acute intakes, the model may be initialized with amounts of radionuclide j in compartments 1 to 9 and/or 13.

$I(t)$ = the intake rate of radionuclide j into the body via inhalation (for equations for compartments 1 to 9) or ingestion (equation for compartment 13), Bq/day

D_i = the deposition fraction of inhaled radionuclides into the major physiological portions of the lung, dependent on the particle size. The deposition fractions used correspond to a set of equations fit to the curves in Figure 5.1 of ICRP 30, Part 1 (ICRP 1979a).

F_i = the fraction of deposited material assumed to reside in each of the lung compartments, dependent on the translocation class of the inhaled material. Values of F_i and D_i are given in Table 4.2.

λ_i = the rate constant describing the transfer of material out of compartment i, day^{-1}

Δ_{ij} = the net rate of radiological decay (or ingrowth) for radionuclide j in compartment i, Bq/day

δ_f = a Dirac delta function, where $\delta_f = 1.0$ if f_1 is not equal to 1.0, and where $\delta_f = 0.0$ if $f_1 = 1.0$

f_1 = the fractional uptake from the GI tract to the body

TABLE 4.1. Equations for the General Model Using Parameters Defined on Page 4.3

1. Lung Comparments

$$\frac{dY_{ij}}{dt} = I(t)\ D_i\ F_i - \lambda_i\ Y_{ij} - \Delta_{ij};\ i = 1,9$$

$$\frac{dY_{10j}}{dt} = \lambda_8\ Y_{ij} - \lambda_{10}\ Y_{10j} - \Delta_{10j}$$

$$\frac{dY_{11j}}{dt} = \lambda_9\ Y_{9j} - \Delta_{10j}$$

$$\frac{dY_{12j}}{dt} = \lambda_6\ Y_{6j} - \lambda_7\ Y_{7j} - \lambda_{12}\ Y_{12j} - \Delta_{12j}$$

2. GI-Tract Compartments

$$\frac{dY_{13j}}{dt} = (\lambda_2\ Y_{2j} + \lambda_4 + \lambda_{4j} + \lambda_{12}\ Y_{12j}) + I(t) - \lambda_{13}\ Y_{13j} - \Delta_{13j}$$

$$\frac{dY_{14j}}{dt} = \delta_f\ \lambda_{13}\ Y_{13j} - \frac{\delta_f\ f_1\ \lambda_{14}}{1 - f_1} + \lambda_{14}\ Y_{14j} - \Delta_{14j}$$

where $\delta_f = 1$ if $f_1 \neq 1.0$

$\delta_f = 0$ if $f_1 = 1.0$

$$\frac{dY_{ij}}{dt} = \lambda_{i-1}\ Y_{i-1,j} - \lambda_i\ Y_{ij} - \Delta_{ij};\ i = 15,\ 16$$

3. Transfer Compartment

$$\frac{dY_{17j}}{dt} = [\lambda_1\ Y_{1j} + \lambda_3\ Y_{3j} + \lambda_5\ Y_{5j} + \lambda_{10}\ Y_{10j}]$$

$$+ \left[\left(\frac{\delta_f\ f_1\ \lambda_{14}}{1 - f}\right) Y_{14j} + (1 - \delta_f)\ \lambda_{13}\ Y_{13j}\right] - \Delta_{17}\ Y_{17j} - \Delta_{17j}$$

4. Organ Compartments

$$\frac{dY_{ij}}{dt} = f_i\ \lambda_{17}\ Y_{17j} - \lambda_i\ Y_{ij} - \Delta_{ij};\ i = 18,\ 33$$

TABLE 4.2. Deposition Fractions and Clearance Half Times[a] ($t_{1/2}$) for the Lung Model

Region	D_i[b]	Compartment	Class D F_i	Class D $t_{1/2}$	Class W F_i	Class W $t_{1/2}$	Class Y F_i	Class Y $t_{1/2}$
Naso-Pharangeal	0.3	1	0.5	0.01	0.1	0.01	0.01	0.01
		2	0.5		0.9	0.4	0.99	0.4
Tracheo-Bronchial	0.08	3	0.95	0.01	0.5	0.01	0.01	0.01
		4	0.05	0.2	0.5	0.2	0.99	0.2
Pulmonary	0.25	5	0.8	0.5	0.15	50	0.05	500
		6	0	0	0.4	1	0.4	1
		7	0	0	0.4	50	0.4	500
		8	0.2	0.5	0.05	50	0.135	500
		9	0	0	0	0	0.015	500
Lymph		10	0	0.5	0	50	0	1000
		11	0	0	0	0	0	∞

(a) Modified from ICRP 19 (1972) in days.
(b) For a 1-μm-Activity Median Aerodynamic Diameter (AMAD) aerosol.

The term Δ_{ij} is developed using a recursive application of the Bateman equations (Bateman 1910), and the technique is further described in the following section on decay. However, it is used with the standard assumption that daughters produced in vivo can be described with the same metabolic parameters as the parent radionuclide. While this assumption is in general not valid, data in most cases do not exist from which the parameters for in vivo produced daughters can be estimated. Parameters can be estimated for the daughters not produced in vivo, but in general the daughters are transported to different organs than the parent. Even if the parent and daughter go to the same organ, the parameters describing the retention of the daughter taken up by the organ rather than produced in the organ are not necessarily the same.

Because the rates of excretion of the radionuclides from the body were not part of this investigation, the equations are not included that describe the elimination of material leaving the designated organs.

4.1.2 The Alkaline Earth Model

The alkaline earth model implemented in ICRP 30 (1979-1982) calculations is based on the power function representation given by ICRP 20 (1973). The preferred model was the recycling model of Johnson (1981b). This model uses extra compartments in mineral bone to replace the power functions and includes recycling of materials through the transfer compartment. This model is illustrated schematically in Figure 4.2.

The differential equations describing the lung and GI-tract models used with the alkaline earth model are the same as those used for the general model. The differential equations describing the unique portions of the alkaline earth model are given in Table 4.3. This model replaces the general organ model of the general model with specific compartments for cancellous (trabecular) bone, cortical (compact) bone, bone surfaces, and other soft tissues. Because these compartments include inward as well as outward transfers, the notation of the equations in Table 4.3 includes λ to be transfers into a compartment, and λ' to be transfer rates out of a compartment.

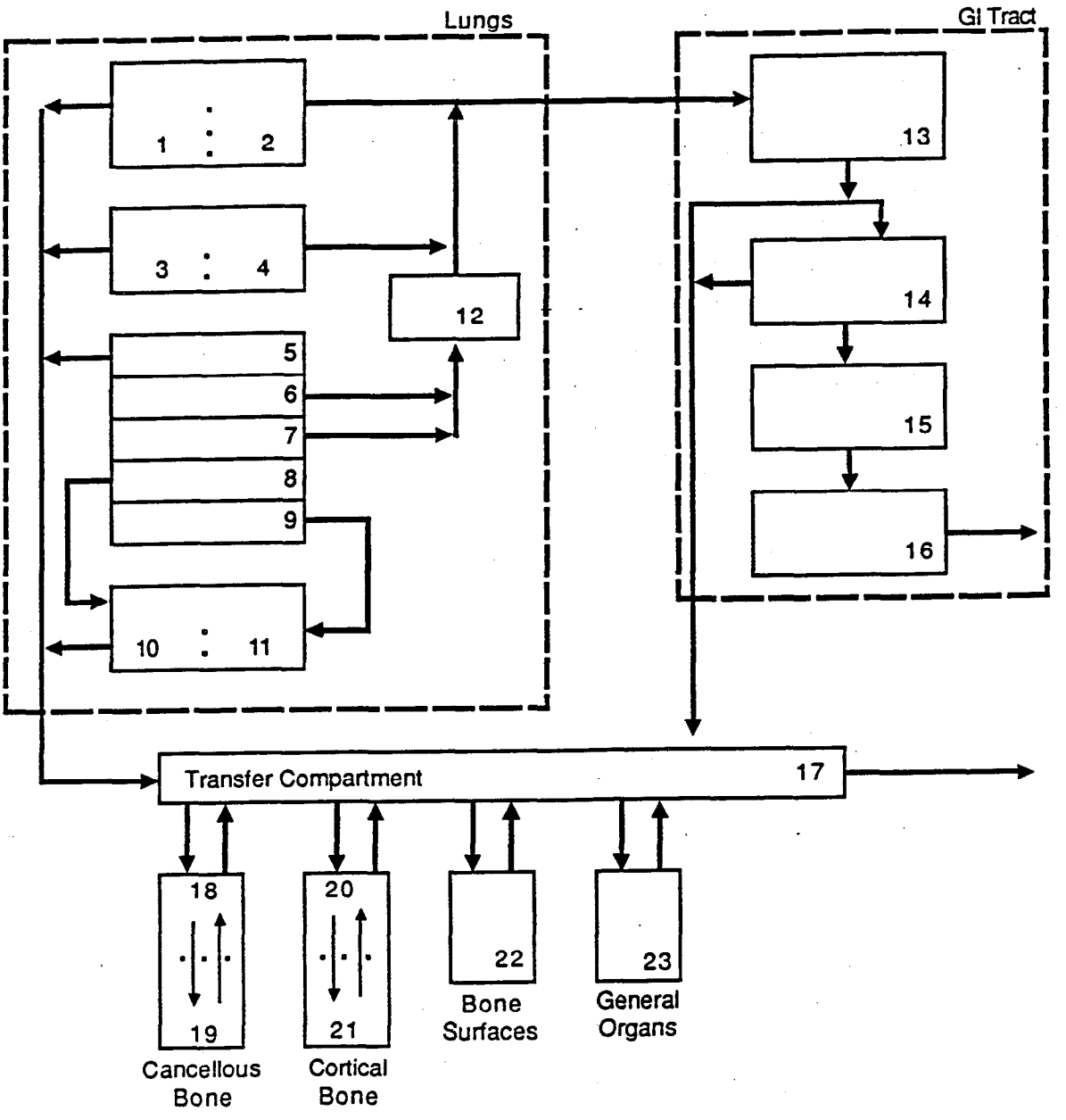

FIGURE 4.2. The Alkaline Earth Model

TABLE 4.3. Equations for the Alkaline Earth Model

1. and 2. Include Lung and GI-Tract Compartments Identical to Those of General Model

3. Transfer Compartment

$$\frac{dY_{17j}}{dt} = [\lambda_1 Y_{1j} + \lambda_3 Y_{3j} + \lambda_5 Y_{5j} + \lambda_{10} Y_{10j}]$$
$$+ \frac{\delta_f f_1 \lambda_{14}}{1 - f_1} Y_{14j} + (1 - \delta_f) \lambda_{13} Y_{13j}$$
$$+ \lambda'_{18} Y_{18j} + \lambda'_{20} Y_{20j} + \lambda'_{22} Y_{22j} + \lambda'_{23} Y_{23j}$$
$$- (\lambda_{17} + \lambda_{18} + \lambda_{20} + \lambda_{22} + \lambda_{23}) Y_{17} - \Delta_{17j}$$

4. Cancellous Bone Compartments

$$\frac{dY_{18j}}{dt} = \lambda_{18} Y_{17j} + \lambda'_{19} Y_{19j} - (\lambda'_{18} + \lambda_{19}) Y_{18j} - \Delta_{18j}$$

$$\frac{dY_{19j}}{dt} = \lambda_{19} \lambda_{18j} - \lambda'_{19} Y_{19j} - \Delta_{19j}$$

5. Cortical Bone Compartments

$$\frac{dY_{20j}}{dt} = \lambda_{20} Y_{17j} + \lambda'_{21} Y_{21j} - (\lambda'_{20} + \lambda_{21}) Y_{20j} - \Delta_{20j}$$

$$\frac{dY_{21j}}{dt} = \lambda_{21} Y_{20j} - \lambda'_{21} Y_{21j} - \Delta_{21j}$$

6. Bone Surface Compartment

$$\frac{dY_{22j}}{dt} = \lambda_{22} Y_{17j} - \lambda'_{22} Y_{22j} - \Delta_{22j}$$

7. Other Soft Tissue Compartment

$$\frac{dY_{23j}}{dt} = \lambda_{23} Y_{17j} - \lambda'_{23} Y_{23j} - \Delta_{23j}$$

4.1.3 The Iodine Model

The iodine model implemented is that of Johnson (1982), which includes the provisions for calculating doses to fetal thyroid from iodine ingestion by the mother. The lung and GI-tract models are the same as those of the general model, and the model for the maternal thyroid is essentially the same as that used for ICRP 30 (1979-1982). The model is illustrated in Figure 4.3. The differential equations that implement the model are listed in Table 4.4. All of the terms used are as defined above, with the addition of the fractional transfer terms f_f, for fraction to fetal thyroid from the maternal inorganic compartment, and f_m, for the fractional transfer to the maternal thyroid. The compartment for bladder is not used in the ICRP 30 model but is retained from Johnson in this implementation. The metabolic parameters for the thyroid are programmed into the subroutine, rather than read from the more general data library. These parameters are basically those of Johnson (1982), with the biological half time of iodine in the thyroid corrected to 80 days, as was actually used in ICRP 30 (see the errata to ICRP 30 Part 1 given at the end of ICRP 30 Part 3, 1981).

All decay products of the iodine as assumed to be stable or to escape the body before decaying (isotopes of the noble gas xenon).

The fetal thyroid model is included in the GENII system for future uses. The dose factors are not included in the routine tables of dose factor files normally accessed by the DOSE routine.

4.1.4 The Tellurium/Iodine Model

Some isotopes of tellurium decay to yield radioactive isotopes of iodine. It is assumed that all iodine produced in the body by the decay of tellurium is translocated instantaneously to the iodine inorganic transfer compartment. The metabolic behavior of iodine entering the inorganic transfer compartment this way is assumed to be governed by the model described above for iodine. The metabolic behavior of parent and daughter tellurium is governed by the general model.

The tellurium/iodine model is illustrated in Figure 4.4. The basic model is that of the general model, with the relevant portions of the iodine model included for iodine produced in the body. The equations implementing

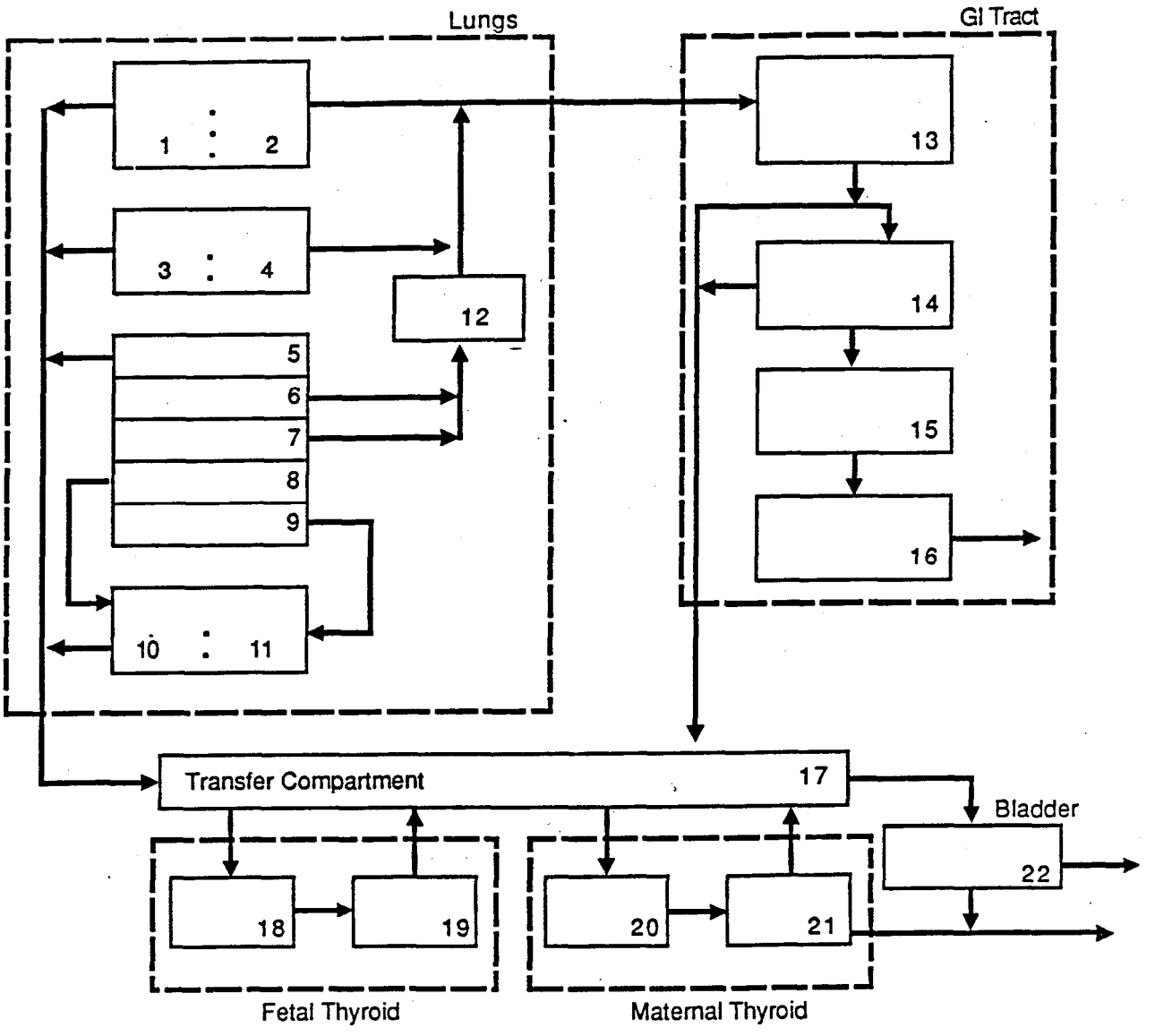

FIGURE 4.3. The Iodine Model

TABLE 4.4. Equations for the Iodine Model

1. and 2. Include Lung and GI-Tract Compartments Identical to Those of General Model

3. Transfer Compartment (Maternal Inorganic)

$$\frac{dY_{17}}{dt} = [\lambda_1 \lambda_{1j} + \lambda_3 Y_{3j} + \lambda_5 Y_{5j} + \lambda_{10} Y_{10j}] + \lambda_{13} Y_{13j}$$
$$+ \lambda_{19} Y_{19j} + 0.9 \lambda_{21} Y_{21j} - \lambda_{17} Y_{17j} - \Delta_{17j}$$

4. Fetal Organs (Thyroid and Organic Compartment)

$$\frac{dY_{18j}}{dt} = f_f \lambda_{17} Y_{17j} - \lambda_{18} Y_{18j} - \Delta_{18j}$$

$$\frac{dY_{19j}}{dt} = \lambda_{18} Y_{18j} - \lambda_{19} Y_{19j} - \Delta_{19j}$$

5. Maternal Organs (Thyroid and Organic Compartment)

$$\frac{dY_{20j}}{dt} = f_m \lambda_{17} Y_{17j} - \lambda_{20} Y_{20j} - \Delta_{20j}$$

$$\frac{dY_{21j}}{dt} = \lambda_{20} Y_{20j} - \lambda_{21} Y_{21j} - \Delta_{21j}$$

6. Bladder

$$\frac{dY_{22j}}{dt} = (1 - f_f - f_m) \lambda_{17} Y_{17j} - 0.1 *0.9* \lambda_{21} Y_{21j} - \lambda_{22} Y_{22j} - \Delta_{22j}$$

where $f_f = 0.0$, if age $\leq$90 days or age >270 days
$f_f = 0.03$ (age/90 - 1), if 90 < age $\leq$270 days
$f_m = 0.3$

7. Note: All xenon decay products are assumed to escape the body before decaying.

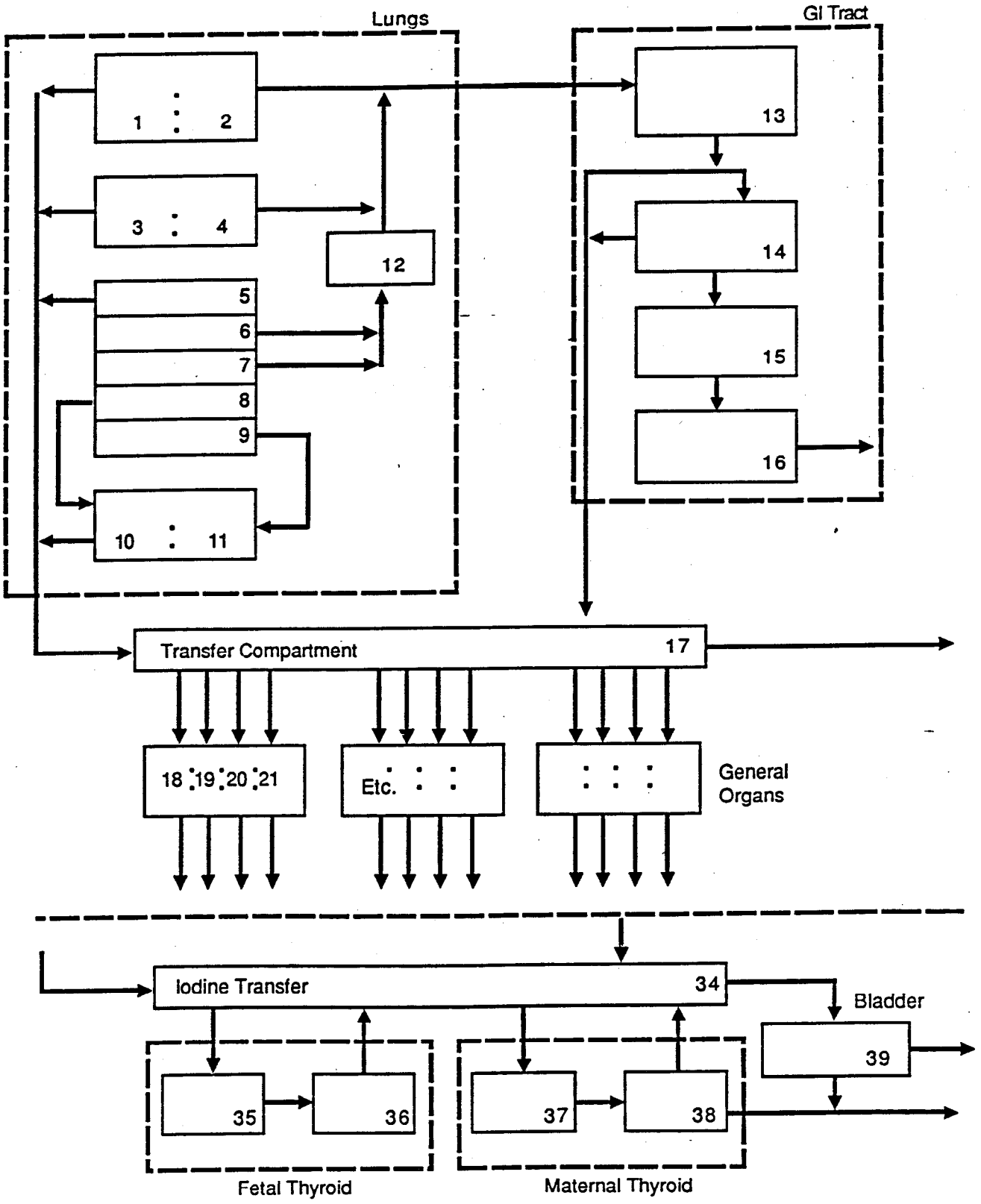

FIGURE 4.4. The Tellurium/Iodine Model

this model are essentially identical to those for the other two models, with appropriate revision of the maternal inorganic compartment to indicate that in vivo produced iodine is all moved instantaneously to that compartment. This equation is given in Table 4.5. The combination of the tellurium/iodine model including the fetal thyroid dose calculation capability is unique in our experience.

As with the basic iodine model, all xenon decay products of the iodine are assumed to escape the body before decaying.

4.1.5 The Radium/Radon Model

A special case of the alkaline earth model is implemented for the decay of Ra-226 through Rn-222. For this decay chain, radon is assumed to diffuse entirely out of soft tissues of the body before decaying and to retain only 30% in mineral bone tissues (ICRP 1979a). Daughter products of the radon are allowed to continue to build into the bone compartments. The equations used to implement this option are provided in Table 4.6.

4.1.6 The Tritium and Carbon Models

Tritium and carbon-14 are radionuclides handled by the general model (Section 4.1.1) in a slightly modified manner. Both are elements that are integral to the human metabolism.

Tritium is assumed to be in the form of tritiated water. All tritiated water ingested or inhaled is assumed to be completely and instantaneously absorbed into the transfer compartment. Tritiated water is assumed to be uniformly distributed among the soft tissues at any time following intake, where it is retained with a biological half time of 10 days. In addition, exposure to an atmosphere containing tritium results in intake of that material by absorption through intact skin. The combined total rate of intake of tritium in air is assumed to be 150% of the inhalation intake rate alone.

In a similar fashion, all intakes of carbon-14 are assumed to be completely and instantaneously absorbed into the transfer compartment. This is equivalent to assuming that inhaled material is carbon dioxide gas and that ingested materials are readily absorbed carbohydrates. Carbon is assumed to be distributed throughout the organs and tissues of the body, where it is

TABLE 4.5. Equations for the Tellurium/Iodine Model

1. All parent (tellurium) equations are identical to those of the general model.

2. Transfer Compartment (for iodine only) (Maternal Inorganic)

$$\frac{dy_{34j}}{dt} = \sum_{n} \Delta_{nj} + \lambda_{36} Y_{36j} + 0.9 \lambda_{38} Y_{38j} - \lambda_{34} Y_{34j}$$

where n = total of all organs and all parents yielding iodine
j = iodine index only.

3. All iodine transfers are governed as for iodine model (with the compartment indices as appropriate).

4. Note: All xenon decay products of iodine are assumed to escape the body before decaying.

TABLE 4.6. Equations for the Radium/Radon Model

1. All equations are identical to those of the alkaline earth model, with the exception of RN daughter handling.

2. Soft Tissue Compartments

$\Delta_{ij} = 0.0$; j = RN222 index

3. Bone Compartments

$\lambda'_{ij} = 0.3\ \Delta_{ij}$; j = RN222 index

λ'_{ij} is then used throughout, replacing Δ_{ij}

retained with a biological half time of 40 days. This assumption is considered by ICRP 30 (ICRP 1979-1982) to yield realistic estimates for carbon-14-labeled metabolites and to overestimate doses from most other carbon-14-labeled compounds.

4.1.7 Decay Data

Radioactive nuclei sometimes decay through a number of unstable daughters before reaching a stable (or very-long-lived) end state. These decay chains are important in that the decay energies of the daughter products contribute to the total dose received from intake of the parent. The data on radionuclide half-lives, decay chains, and various fractional branching ratios within chains are largely taken from the DRALIST data of Kocher (1981b) for consistency with gamma energy data used elsewhere in the GENII code package. These data are listed in a standard library accessed by the computer codes.

Radionuclides of half-life less than 10 minutes are of little importance in environmental calculations and in terms of internal dose, except where they are members of longer decay chains. All decay data in the standard library that is used represent radionuclides with half-lives greater than 10 minutes. For chains with daughters with very short half-lives, the decay energy associated with these short-lived daughters has been assigned to the parent. This assignment includes correction of the SEE factors in the dose calculations. The appropriate branching ratios have been considered.

The computer programs within the GENII package include a generalized chain decay processor. This processor can give the activity of any member of a decay chain as a function of time from any initializing condition. Variants of the processor provide the total activities of chain members for conditions of continual input of the parent to a system. The chain processor (ACHAIN, with variants BCHAIN, DGCHAIN, etc.) operates on a recursive application of the Bateman equations (Bateman 1910).

The Bateman equations provide a simple means of solving the differential equations describing chain decay. The basic form of the equation is

$$A_n = N_{10} \left[C_1 e^{-\lambda_1 t} + C_2 e^{-\lambda_2 t} + \ldots + C_n e^{-\lambda_n t} \right] \qquad (4.1.1)$$

$$C_i = \frac{\lambda_1 \lambda_2 \ldots \lambda_{i-1}}{\prod_{\substack{j=1 \\ j=i}}^{n} (\lambda_j - \lambda_i)} \qquad (4.1.2)$$

where A_n = the activity of the nth daughter

N_{10} = the initial activity of the parent at time t=0

λ_i = the decay constant for nuclide i of the chain.

For initial conditions where initial concentrations of the daughter radionuclides exist, the equations can be applied assuming each nuclide is the start of a chain. The results are then summed.

Another variant in general decay schemes is branching decay. In this case, the Bateman solution is applied by using partial decay constants (that is, the decay constant times the branching fraction) in the numerator of the constants C_i. If the decay chain branches and subsequently the two branches are rejoined (as in the natural radioactive series), the two branches are treated by this method as separate chains. The production of a common member beyond the branch point is the sum of the two paths.

4.1.8 Metabolic Data

Values for the fractional uptake of materials, their transfer coefficients from compartment to compartment, and their elimination rates are all contained in a standard computer library. The basic source of this information is the computer code GENMOD. Most of the data in this library is adapted directly from ICRP 30 (1979-1982). It also contains the specialized parameters for the alkaline earth model (Ca, Sr, Ba, Ra) of Johnson and Myers (1981).

The parameters for the iodine model have been deleted from the library and hard-wired into the computer code. This simplifies both the iodine model and especially the tellurium/iodine model.

In some instances, the parameters obtained from GENMOD have reverted to those of the ICRP because no documentation of the values that came in the original file was available. It could not be determined if those values were

intentionally used. (A specific example is metabolic data for technetium in thyroid.)

The actinide metabolic data have been updated to account for the recommendations of ICRP 48 (1986). This includes new f_1 factors, as well as the half-time data and fractional uptake data for specific organs.

The data adopted from GENMOD includes metabolic data for infants (up to one year old). This portion of the data has not as yet been extensively explored. The methods of deriving this information are given briefly in Johnson and Carver (1981) and seem reasonable, but the information has not yet been verified. The data may eventually be used with some minor variations on the standard transfer rates for the lung and GI-tract model.

4.1.9 Dosimetric Data

As described above, once the integrated retentions of the radionuclides in the source organs have been calculated, the dose to each target organ is calculated for each radiation of type i from radionuclide j

$$H(T \leftarrow S)_i = U_S \cdot 1.6 \cdot 10^{-13}\ SEE(T \leftarrow S)_i \cdot 10^3 \qquad (4.1.3)$$

where U_S = the number of transformations of radionuclide j in source organ S over the period of integration following intake of the radionuclide

$1.6 \cdot 10^{-13}$ = the number of joules in 1 MeV

$SEE(T \leftarrow S)_i$ (in MeV g^{-1} per transformation) = the specific effective energy for radiation type i, suitably modified by quality factor, absorbed in T from each transformation in S

10^3 = the conversion factor from g^{-1} to kg^{-1}.

In general, for the intake of any mixture of radionuclides, i.e., parent with daughters, the dose in target organ T from radioactivity in several different sources S is given by

$$H = 1.6 \cdot 10^{-10} \sum_S \sum_j \left[U_S \sum_i SEE(T \leftarrow S)_i \right]_j \qquad (4.1.4)$$

The factors for specific effective energy are from a tape of SEE factors from ORNL.[a] For purposes of tabulating SEE values, the body is divided into a set of identified source and target regions with the remaining tissue assigned as "other". This region is largely muscle. The breast dose is based on the SEE values for "other" as a target.

The metabolic models used in the calculations partition the activity in the body among a number of organs and assign the residual to be uniformly distributed among the remaining tissues, generally referred to as the "other" tissue. This "other" tissue group does not necessarily correspond to that noted in the previous paragraph. Calculations of the number of nuclear transformations are performed for the lung, GI tract, transfer compartment, organs identified in the metabolic model, and the "other" tissue group (if it is identified in the model). The transformations in the transfer compartment are distributed among the "identified" organs and the "other" by mass fraction. The SEE value for "other" as a source is computed as

$$SEE(T \leftarrow TB) = \frac{M_{TB}\ SEE(T \leftarrow TB) - \sum_S M_S\ SEE(T \leftarrow S)}{M_{OTHER}} \tag{4.1.5}$$

where M_{TB} and M_S are the masses of the total body and source organs. The summation extends over all explicitly identified organs (source regions) in the metabolic model. The mass of the "other" tissue is

$$M_{OTHER} = M_{TB} - \sum_S M_S \tag{4.1.6}$$

The computer code for calculating internal dose, INTDF, does not itself provide effective dose equivalent (whole body dose). Instead, it calculates the incremental organ doses for each year following an initial intake. The output is the incremental dose to each organ, which is then used in other portions of the code to assemble annual doses, dose commitments, and

---

(a) Personal communication from Keith Ackerman of Oak Ridge National Laboratory, Oak Ridge, Tennessee.

accumulated doses. The method by which these doses are assembled was described in Section 3.4.

4.2 EXTERNAL DOSIMETRY

The ISOSHLD code that is the basis of the EXTDF module of GENII has been documented and verified numerous times (Engel, Greenborg, and Hendrickson 1966; Simmons et al. 1967; Mansius 1969). It is a basic shielding code using the commonly accepted techniques of Rockwell (1956) or other standard references. Only the basic theory is reproduced here.

4.2.1 Point Kernel Integration

Figure 4.5 illustrates a point source of gamma-ray photons, S_o (in this example within a large cylindrical volume, S_v), that emits with equal intensity in all directions.

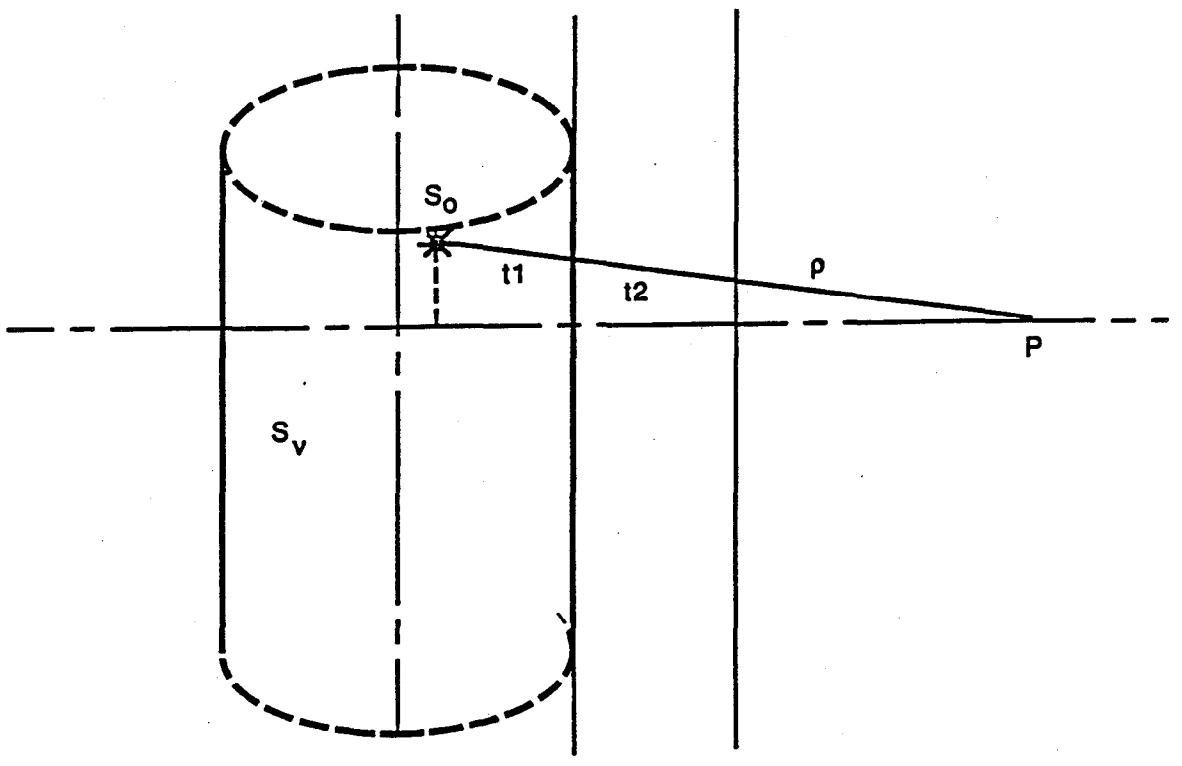

FIGURE 4.5. Point Source (S_o) Within a Finite Cylindrical Volume (S_v) at a Distance p from Point P Through Shields of Thickness t1 and t2

The dose rate at point P from photons originating at S_o is given by

$$D = \frac{S_o B\ e^{-b_1}}{K 4\pi\rho^2} \tag{4.2.1}$$

where $b_1 = \sum_{i=1}^{N} \mu_i t_i$

D = dose rate, R/h

S_o = emission rate of gamma rays, photons/sec

B = build-up factor, dimensionless

μ_i = linear absorption coefficient of the ith shield, cm^{-1}

t_i = slant distance through the ith shield, cm

K = conversion of gamma-ray flux to dose rate

ρ = distance from source to dose point, cm

N = number of shields.

The dose rate at point P from photons of all initial energies originating at all points within the source volume, S_V, is given by

$$D_{tot} = \int_E \int_V \frac{S_o(E,V)\ B(E,b_1)\ e^{-b_1}}{K(E)\ 4\pi\rho^2(V)}\ dV\ dE \tag{4.2.2}$$

Equation (4.2.2) may be analytically integrated for a few simple geometries, and this technique is used to obtain some of the extended source dose formulas given in the shielding handbooks (Rockwell 1956; Etherington 1958; Blizard 1962). This equation may be numerically integrated for virtually any source geometry; however, only regular geometric shapes are normally considered suitable for computer integration. Complex geometric shapes are generally constructed by synthesis of simple shapes.

This numerical integration technique (commonly referred to as point kernel integration) divides the source volume into a number of differential volumes. The source energy is divided into a number of energy groups narrow enough to consider the build-up factors, attenuation coefficients, and dose conversion factors consistent over the energy range of the group. Each monoenergetic differential volume source is then treated as a point source, and

the dose from each of these point sources is calculated. For each point source, new values of B, μ_i, t_i, ρ, S_0, b_1, and K are needed and are calculated using trigonometric relationships and basic data appropriate to the system geometry, source photon energies, and materials. Integration over source volume and source energy is then obtained by summing the dose contributions from all differential source volumes over all source energies.

4.2.2 Mixed Mass Attenuation Coefficients

Linked to EXTDF is a library of mass-attenuation coefficients in 16 energy groups for 20 common materials. These materials are water, tissue, air, hydrogen, lithium, carbon, aluminum, titanium, iron, nickel, zirconium, tin, tungsten, lead, uranium, ordinary and magnetite concretes, strontium, promethium, and cerium. The attenuation coefficients are listed for materials of unit density. For each source and shield region, the code input requires the library material number and the material density. Up to five materials per region are allowed. Thus, EXTDF calculates region mixed mass attenuation coefficients, μ_i, for each region, i, by

$$\mu_i = \sum_j d_j \mu_j \tag{4.2.3}$$

where j is the index of materials specified to be in region i. If a combination of the previous 10 materials will not adequately describe a desired shield material, the code user may add additional materials to this library.

4.2.3 The Build-Up Factor

Linked to EXTDF is a build-up factor library that contains, for 16 photon energies, the coefficients A, α_1, and α_2 of Taylor's equation (Rockwell 1986)

$$B = A\ e^{-\alpha_1 b_1} + (1-A)\ e^{-\alpha_2 b_1}, \tag{4.2.4}$$

for dose build-up from a point isotropic source in seven materials: water, aluminum, iron, tin, tungsten, lead, and uranium. This material range covers the effective atomic numbers (EANs) from 4 to 92. The data in this library were taken from Goldstein (1959, p. 376).

In the process of kernel integration, the build-up factor for each differential source volume is calculated for all of the materials between source point and dose point. Values of t_i, the source point to dose point line of sight distance through the source and shield regions, are calculated for each new source point by trigonometric relationships. Values of μ_1 for each shield region are obtained from Equation (4.2.3). EXTDF then calculates b_1 for the line of sight from the source point to dose point, and b_1 is used in Taylor's equation to obtain the correct build-up, B.

Several considerations are discussed here in regard to how A, α_1, and α_2 (from the build-up factor library) are used. The method of selection is by effective atomic number. The EAN has been defined in a number of ways (discussed in Murty 1965); however, within EXTDF it is defined as

$$EAN = \frac{\sum_j \frac{d_j Z_j}{A_j}}{\sum_j \frac{d_j}{A_j}} \tag{4.2.5}$$

where Z_j = atomic number of species j in the shield
A_j = atomic weight of species j in the shield
d_j = density of species j in the shield.

A particular shield region should be chosen whose characteristics will be used in calculating build-up through all shields in the system. This region is usually the last shield region, provided the region is thick compared to the sum thickness of the other regions. If no build-up region choice is made, the code will use the last defined region. The EAN is then calculated for the chosen region. EXTDF brackets this effective atomic number in the build-up factor table, calculates the build-up factors for both effective atomic numbers available in the library, and then interpolates to obtain the final build-up factor for use in the numerical integration.

Because the atomic weight for each material in the library is required for use in evaluating EAN, an effective atomic weight (EAW) was defined for the mixed elemental materials given in the library. These were calculated by

$$EAW = \frac{\sum_k N_k A_k}{\sum_k N_k} \tag{4.2.6}$$

where N_k is atomic density of species K in the mix, and A_k is the atomic weight of species k in the mix.

In summary, the build-up treatment in EXTDF includes all mean free paths in material between the source point and dose point and has the build-up characteristics of the last (or a particular specified shield region).

4.2.4 Conversion of Surface Dose to Effective Dose Equivalent

External dose rate calculations traditionally end at an exposure rate in air, in R/hr or equivalent units. The EXTDF results are used in conjunction with internal dose factors expressed in terms of effective dose equivalent, i.e., the weighted sum of organ doses. Therefore, all results are converted to effective dose equivalent using energy-dependent surface-dose to organ-dose conversion factors derived from information in Kocher (1981a). These values were derived from dose-rate factors for monoenergetic sources at the body surface given by O'Brien and Sanna (1976) and from scattered spectra for monoenergetic sources in an infinite atmospheric cloud given by Dillman (1974); the calculations were performed by Eckerman and Kerr in Kocher (1981a). The results are comparable to, but slightly larger than, those given by Kocher (1979) and Till and Meyer (1983). For GENII, these were weighted with the ICRP 26 (1977) organ weighting factors and summed to give the surface-dose to effective dose equivalent conversion factors listed in Table 4.7.

TABLE 4.7. Photon Energy Group Definitions Conversion Factors Used in the EXTDF Code

Group	Photon Energy Range, MeV	Average Photon Energy, MeV	Surface Dose to EDE Factor (rem/rad)
1	0.01 - 0.02	0.015	0.0424
2	0.02 - 0.03	0.025	0.131
3	0.03 - 0.04	0.035	0.267
4	0.04 - 0.05	0.045	0.410
5	0.05 - 0.06	0.055	0.507
6	0.06 - 0.07	0.065	0.550
7	0.07 - 0.08	0.075	0.59
8	0.08 - 0.09	0.085	0.62
9	0.09 - 0.1	0.095	0.65
10	0.1 - 0.2	0.15	0.67
11	0.2 - 0.3	0.25	0.66
12	0.3 - 0.4	0.35	0.65
13	0.4 - 0.55	0.475	0.65
14	0.55 - 0.75	0.65	0.66
15	0.75 - 0.9	0.825	0.67
16	0.9 - 1.1	1.0	0.68
17	1.1 - 1.35	1.225	0.7
18	1.35 - 1.6	1.475	0.72
19	1.6 - 1.8	1.7	0.74
20	1.8 - 2.0	1.9	0.76
21	2.0 - 2.2	2.1	0.765
22	2.2 - 2.4	2.3	0.77
23	2.4 - 2.6	2.5	0.775
24	2.6 - 2.8	2.7	0.777
25	2.8 - 3.2	3.0	0.78

4.3 ATMOSPHERIC DISPERSION

The dose to a receptor from an atmospheric release depends on the spatial and temporal distribution of radionuclides in the environment. This distribution is a function of the way in which the material is released and of the environment between the release point and the receptor. Atmospheric dispersion models describe the transport and diffusion of material released to the atmosphere. They may also describe the depletion of material as a result of deposition on surfaces, washout by precipitation, chemical transformations, and radioactive decay. Kao's report (1984) contains mathematical derivations of several general diffusion models.

Selection of a dispersion model for a specific application should be based on intended model use, source characteristics, and available meteorological data. Simple atmospheric models are appropriate for making concentration estimates to be used in evaluating potential doses for environmental impact statements and preliminary safety analyses because the releases are hypothetical, the receptors are not in the immediate vicinity of the release point, and the evaluation is based on assumed meteorological conditions. The simple models may also be appropriate for assessing the consequences of a routine release if the release is constant for prolonged periods and if no systematic spatial variations of the meteorological conditions occur. More complex models are required where topography has a significant effect on atmospheric transport and diffusion. In addition, complex models should be used for evaluating the consequences of accidental releases where actual meteorological data are available. Specialized models are required if concentration estimates are needed in the immediate vicinity of a release point. These specialized models require specific information about the geometry of the release because they must treat initial plume conditions. Briggs (1984) and Hosker (1984) discuss problems associated with modeling transport and diffusion near the source.

Simple atmospheric dispersion models are appropriate for estimating radiological doses from potential routine and accidental radionuclide releases at Hanford. For cases where simple models are not appropriate, the GENII package allows input or realistic data calculated independently of the

GENII models. GENII also includes an empirical building wake diffusion model that may be used to make concentration estimates near the source.

The GENII package implements a selection of straight-line Gaussian-plume models for use when appropriate. These models are used to estimate air concentrations on a grid for 16 directions and up to 10 distances. The GENII models make use of this information, along with information on individual location or population distribution, to project exposures from atmospheric releases.

4.3.1 Gaussian Plume Models

The straight-line Gaussian plume model is the basis of a set of dispersion models that are widely accepted for routine dose assessment applications. In a strict sense, these models are appropriate if:

1) the release is from a source that has dimensions that are small compared to the distances at which concentrations are to be estimated
2) the terrain is relatively flat and has uniform surface conditions in all directions
3) the atmospheric conditions at the time and location of the release completely control the transport and diffusion of material in the atmosphere.

It is not appropriate to apply these models to releases in valleys, near lake shores, or along coasts because they may produce unrealistic dose estimates.

The basic Gaussian plume model for a continuous release is

$$\bar{\chi} = \frac{Q'}{2\pi\sigma_y \sigma_z U} F(y)\ G(z) \qquad (4.3.1)$$

where $\bar{\chi}$ = the concentration at the receptor (Ci/m^3)
Q' = the release rate (Ci/sec)
σ_y = the horizontal diffusion coefficient (m)
σ_z = the vertical diffusion coefficient (m)
U = the average wind speed (m/sec)
$F(y)$ = a horizontal off-axis correction term

$G(z)$ = a vertical off-axis correction term.

In this form, the x axis is assumed to be directed in the downwind (transport) direction, the y axis is directed to the left, and the z axis is directed vertically upward. The diffusion coefficients describe the spread of the plume and are functions of the atmospheric conditions and the time that it takes material to be transported from the release point to the receptor. In addition, they are frequently given as functions of atmospheric stability and distance from the source. Parameterization of diffusion coefficients is discussed in Section 4.3.2. Initial dilution of material in the plume is determined by the wind speed at the height of the release. If the release takes place at or near ground level, it is common practice to calculate the wind speed at 10 m above ground in computations.

The horizontal and vertical off-axis correction terms are dimensionless quantities that describe the decrease in concentration with increasing distance from the plume axis. The horizontal correction term has the form

$$F(y) = \exp[-0.5(y/\sigma_y{}^2] \tag{4.3.2}$$

where y is the horizontal distance to the plume axis in meters. At the plume axis, $y = 0$ and $F(y) = 1$. As the distance from the axis increases, $F(y)$ decreases in the familiar bell-shaped form that is characteristic of Gaussian curves. The initial form of the vertical off-axis correction term is similar to that given for $F(y)$. It is

$$G(z) = \exp\{-0.5[(z-h_e)/\sigma_z]^2\} \tag{4.3.3}$$

where z is the height of the receptor above ground in meters, and h_e is the effective release height in meters. The effective release height is the actual release height corrected as appropriate for initial plume rise or downwash. Estimating the effective release height is discussed in Section 4.3.3. Vertical diffusion is limited by the ground at the bottom of the atmosphere. Upward diffusion may also be limited. In this situation, the limit is called the top of the mixing layer.

The ground and the top of the mixing layer are generally assumed to reflect material. These characteristics are incorporated into G(z) by use of virtual sources below the ground and above the top of the mixing layer (e.g., see Csanady 1973). The resulting form of G(z) is

$$G(z) = \sum_{n=-\infty}^{\infty} \{\exp\{-0.5[(2nH-h_e + z)/\sigma_z]^2\} + \exp\{-0.5[(2nH-h_e - z)/\sigma_z]^2\}\} \quad (4.3.4)$$

where H is the mixing layer thickness (depth) in meters.

Several special cases of interest are included in this relationship. If source and receptor are at ground level and the mixing layer thickness is large compared to the vertical diffusion coefficient,

$$G(z) = 2.0 \quad (4.3.5)$$

For an elevated release and ground-level receptor, if the mixing layer thickness is large compared to the release height and the vertical diffusion coefficient, then

$$G(z) = 2.0 \exp[-0.5(h_e/\sigma_z)^2] \quad (4.3.6)$$

If the receptor is elevated but the remaining conditions remain true, then

$$G(z) = \exp\{-0.5[(h_e-z)/\sigma_z]^2\} + \exp\{-0.5[(h_e+z)/\sigma_z]^2\} \quad (4.3.7)$$

Finally, if the receptor is at ground level, the release is elevated, and the thickness is not large, then

$$G(z) = 2 \sum_{n=-\infty}^{\infty} \exp\{-0.5[(2nH-h_e)/\sigma_z]^2\} \quad (4.3.8)$$

As the plume grows vertically, it gradually becomes uniformly mixed throughout the mixing layer. Uniform mixing is reached when the vertical diffusion coefficient reaches approximately 0.8 H. Beyond the distance at which this occurs, the average concentration in the plume is given by

$$\bar{\chi} = \frac{Q'}{(2\pi)^{1/2}\sigma_y \, HU} F(y) \tag{4.3.9}$$

The Gaussian models, as defined by Equations (4.3.1) and (4.3.9), are most appropriate for estimating average concentrations for periods that are longer than the time of travel from the source to receptor and not so long that atmospheric conditions are likely to change. This restricts limits application of Equations (4.3.1) and (4.3.9) to periods of less than 12 hours and probably 6 hours or less. As the duration of a release increases, it becomes less likely that the wind direction has remained constant since the beginning of the release. To compensate for meandering of the wind, it is assumed that the material in a plume is uniformly distributed across a sector 22.5° in width ($\pi/8$ radians). With this assumption, the average concentration in a plume in which the vertical diffusion has not been limited becomes

$$\bar{\chi} = \frac{4\sqrt{2}\, Q'}{\pi^{3/2} \, x \, \sigma_z \, U} G(z) \tag{4.3.10}$$

where x is the distance between the source and receptor. In plumes with a uniform vertical concentration profile, the concentration becomes

$$\bar{\chi} = \frac{8\, Q'}{\pi \, x \, HU} \tag{4.3.11}$$

If the release continues, it becomes necessary to consider the effects of changes in atmospheric stability, wind speed, and mixing layer thickness, as well as larger changes in wind direction. Equations (4.3.10) and (4.3.11) can estimate the concentration in the plume under each combination of

conditions, but it is no longer appropriate to assume that a receptor is always within the plume. The concentration at a receptor must be estimated by averaging the concentrations during periods when individual plume segments affect the receptor and as well as during the periods when the plume is elsewhere. This long-term average is given by

$$\bar{\chi} = \frac{4\sqrt{2}\,Q'}{\pi\,x} \sum_j \sum_k \sum_l \frac{G(z)}{\sigma_z\,\underline{U}} P_{ijkl} \tag{4.3.12}$$

where P_{ijkl} is the joint probability that the wind direction falls within class i and speed falls within class j, that the stability falls within class k, and that the mixing layer thickness falls within class l. It should be recalled that G(z) is a function of distance, stability, mixing layer thickness, and release height. The derivation of Equations (4.3.9) and (4.3.12) is discussed by Gifford (1968).

The Gaussian Plume based models embodied in Equations (4.3.1), (4.3.9), (4.3.10), (4.3.11), and (4.3.12) estimate average concentrations for continuous releases with constant release rates. These concentrations may be used to evaluate dose rates. Before doses may be estimated, it is necessary to convert the average concentration to exposure. This is done by multiplying the average concentration by the time that the receptor is within the plume. In the case of a release of finite duration, the release duration may be used in computing the exposure.

4.3.2 Diffusion Coefficients

A large number of experiments have been conducted to evaluate atmospheric diffusion coefficients. The results of these experiments have been used to relate diffusion coefficients to atmospheric stability and distance from the source. The most familiar set of relationships are contained in the Pasquill-Gifford-Turner (PGT) curves (Gifford 1961 and 1976).

Martin and Tikvart (1968) and Tadmor and Gur (1969) present mathematical approximations, respectively, to the PGT vertical and horizontal diffusion coefficient curves. These parameterizations have the general form

$$\sigma = Ax^B + C \tag{4.3.13}$$

where A, B, and C are assigned different values for computation of the horizontal and vertical diffusion coefficients. In computation of the horizontal diffusion coefficient, A has been assigned the values for seven atmospheric stability classes, B has a constant value of 0.9031, and C has a value of 0.0. For computation of vertical diffusion coefficients, A, B, and C are assigned values for seven stability classes and three distance ranges. The distance ranges are: 1) less than 100 m, 2) 100 to 1000 m, and 3) greater than 1000 m. Values for A, B, and C are given in Table 4.8. It should be noted that A and C are dimensional constants with units of m^{1-B} and meters, respectively.

4.3.3 Effective Release Height

Computating ground-level concentrations downwind of elevated releases requires that the effective release height be estimated. For free standing stacks, the effective release height is defined as

$$h_e = h_s + h_r - h_d \tag{4.3.14}$$

where h_s = the actual release height (m)
h_r = the plume rise due to momentum and buoyancy (m)
h_d = the plume downwash due to aerodynamic forces around the stack (m).

TABLE 4.8. Constant Values for Diffusion Coefficient Evaluation

Stability Class	Ay	Az Distance Range 1	Az Distance Range 2	Az Distance Range 3	Bz Distance Range 1	Bz Distance Range 2	Bz Distance Range 3	Cz Distance Range 1	Cz Distance Range 2	Cz Distance Range 3
A	0.3658	0.192	0.00066	0.00024	0.936	1.941	2.094	0	9.27	-9.6
B	0.2751	0.156	0.0382	0.055	0.922	1.149	1.098	0	3.3	2
C	0.2089	0.116	0.113	0.113	0.905	0.911	0.911	0	0	0
D	0.1471	0.079	0.222	1.26	0.881	0.725	0.516	0	-1.7	-13
E	0.1046	0.063	0.211	6.73	0.871	0.678	0.305	0	-1.3	-34
F	0.0722	0.053	0.086	18.05	0.814	0.74	0.18	0	-0.35	-48.6
G	0.0481	0.032	0.052	10.83	0.814	0.74	0.18	0	-0.21	-29.2

Equation (4.3.14) may also be used to define the effective release height for stacks in the vicinity of buildings, provided that the stack height is sufficient such that plumes emitted avoid entering the building wakes. As a general rule, a stack 2.5 times the height of nearby buildings is assumed to be equivalent to a freestanding stack.

Briggs (1984) discusses both plume rise and downwash. Plume rise is directly related to the momentum and buoyancy of the effluent and is inversely related to the wind speed. In addition, the extent of plume rise is affected by atmospheric stability and may be limited by the top of the mixing layer. Evaluation of plume rise requires information on stack dimensions and flow, effluent density and temperature, and ambient air temperature. The following relationships from Briggs (1984) provide a consistent set of plume rise estimates for all wind and stability conditions.

Two parameters, buoyancy flux and momentum flux, are used in computing plume rise. The buoyancy flux parameter, F_b, is defined as

$$F_b = g \left(\frac{\rho_a - \rho_o}{\rho_a} \right) w_o \, r_o^2 \qquad (4.3.15)$$

where g = the gravitational constant (9.8 m/sec^2)
ρ_o = the density of the plume (Kg/m^3)
ρ_a = the density of air (Kg/m^3)
w_o = the stack exit velocity (m/sec)
r_o = the inside radius of the stack (m).

The buoyancy flux parameter has dimensions of m^4/sec^3. The momentum flux parameter, F_m, is defined as

$$F_m = (\rho_o / r_a) \, w_o^2 \, r_o^2 \qquad 4.3.16$$

It has dimensions of m^4/sec^2.

The momentum component of plume rise, h_m, is assumed to be limited by atmospheric turbulence. It is given by

$$h_m = \frac{0.9\ [F_m/(Uu^*)]^{1/2}}{0.4 + 1.2\ (U/w_o)} \tag{4.3.17}$$

where U is the stack-height wind speed and u* is a characteristic wind speed associated with turbulence. The relationship between the characteristic wind speed and the measured speed is discussed in Section 4.3.6, Wind Profiles.

The buoyancy component of plume rise, h_b, is estimated using three equations. During unstable and neutral atmospheric conditions, the buoyancy rise component is given by

$$h_b = 1.54\ [F_b/(Uu^*)]^{2/3}\ h_s^{1/3} \tag{4.3.18}$$

During stable atmospheric conditions with a release height wind speed of 1 m/sec or more, the buoyancy rise component is given by

$$h_b = 2.6\ [F_b/(U_s]^{1/3} \tag{4.3.19}$$

where s is a stability parameter. In stable atmospheric conditions, if the wind is less than 1 m/sec, the buoyant plume rise component is estimated as

$$h_b = 5.3\ [F_b/s^{3/2}]^{1/4} - 6\ r_o \tag{4.3.20}$$

The stability parameter in Equations (4.3.19) and (4.3.20) is defined as

$$s = \frac{g}{\theta}\frac{\partial\theta}{\partial z} \tag{4.3.21}$$

where g = the gravitational constant (9.8 m/sec)
θ = the potential temperature of the air (°K)
$\partial\theta/\partial z$ = the potential temperature lapse rate)(°K/m).

Near sea level, the stability parameter may be approximated as

$$s = c/T \tag{4.3.22}$$

where c is a constant that is defined by stability class, and T is the ambient air temperature (°K). The values of c for E, F, and G stability classes are 0.049, 0.27, and 0.49°K/sec^2, respectively.

When Equation (4.3.19) or (4.3.20) is used to compute the buoyant component of plume rise, the estimated rise is compared with the rise computed using Equation (4.3.18). The smaller of the plume rise estimates is then used in computing the final plume rise.

Final plume rise, which is the sum of the momentum and buoyant components, is subject to three constraints. If the release height is greater than the mixing layer thickness or if the stack exit velocity is equal to zero, final plume rise is set to zero. Otherwise, the rise is limited to one half of the distance between the top of the stack and the top of the mixing layer.

The plume rise component Equations (4.3.17), (4.3.18), (4.3.19), and (4.3.20), and the effective release height estimate in Equation (4.3.14) give the height of the plume after it has become essentially horizontal. These equations should not be used to estimate concentrations near the release point because small changes in effective release height result in large changes in estimated ground-level concentrations near the release point. If concentration estimates are needed for locations within a few hundred meters of a stack, the estimates should be made using more appropriate relationships. In most cases, concentration estimates near an elevated release should be viewed with caution, particularly if the release parameters or atmospheric conditions are not well known.

As the distance from the release point increases, the sensitivity of concentration as a function of release height decreases. In most atmospheric conditions, at distances greater than one or two kilometers, the concentration estimates for elevated release should not be sensitive to moderate changes in release height.

4.3.4 Building-Wake Diffusion Model

Atmospheric diffusion in building wakes is usually treated by modifying the Gaussian plume model to account for increased diffusion caused by

buildings. However, analysis of building-wake diffusion data (Ramsdell 1988) shows that the usual methods of estimating the concentrations in wakes do not adequately describe the variations of the concentrations that are caused by changes in atmospheric conditions. An alternative model for centerline concentrations in building wakes, which was proposed by Ramsdell, is included in GENII. That model is based on a statistical analysis of diffusion data obtained at seven locations.

The basic form of the empirical building-wake diffusion model developed by Ramsdell (1988) is

$$\bar{\chi}/Q' = k\, x^a\, A^b\, U^c\, S^d \tag{4.3.23}$$

where x = distance from the release point (m)
A = projected building area (m^2)
S = atmospheric stability class; 1 = A, 2 = B, ...
k, a, b, c, d = parameters to be determined.

This model includes the same variables that have been included in previous models. However, it does not specify the way in which each of the variables enters the model. Multiple linear regression techniques were applied to building wake diffusion data for ground-level releases for a wide range of atmospheric conditions and distances to estimate parameter values for the model. Parameter values for the model are $k = 150$, $a = -1.2$, $b = -1.2$, $c = 0.68$, and $d = 0.5$.

Although the basic wake model provides a "best-fit" to the data in a least squares sense, it is not expected to model the concentrations near the source unless the size of the opening through which the release occurs is small and the flow through the opening is negligible. Similarly, the model does not asymptotically approach the Gaussian plume model as the distance from the source becomes large. To correct these deficiencies, the basic model is incorporated in the following composite model:

$$\bar{\chi}/Q' = \frac{1}{(F_o + F_p + F_w)} \tag{4.3.24}$$

where F_o = the flow rate associated with the release

F_p = the denominator of the Gaussian plume model defined in Equation (4.3.1) multiplied by a factor of 2

F_w = the reciprocal of the wake model defined in Equation (4.3.23).

In this model, the initial flow, F_o, is constant and does not contribute significantly at large distances. Both F_p and F_w increase as x increases. To get the model to asymptotically approach the Gaussian plume model at large distances, the wake-induced diffusion is limited by placing an upper limit on the distance used in the wake model. Further, the limit should be related to building size. In GENII, a characteristic building dimension equal to the square root of the building area is used to limit the wake diffusion contribution in Equation (4.3.24). F_w is allowed to increase until the distance increases to 20 times the characteristic building dimension. At larger distances, the wake diffusion contribution to Equation (4.3.24) is held constant at its maximum value.

The conservative approach to estimating the concentrations downwind of short stacks and roof-top vents is to assume that a release takes place at ground level unless the release point is 2.5 times the building height. However, a significant body of literature exists to support a less conservative assumption in which the behavior of plumes released from short stacks and roof-top vents depends on the ratio between the vertical velocity of the effluent and the wind speed at release height. When the ratio is large, plumes escape the wake; when it is small, they remain in the wake; and when the ratio has an intermediate value, they escape the wake part of the time and are entrained in the wake the remainder of the time.

Following the wake diffusion experiments at the Millstone Nuclear Power Station, Johnson et al. (1975) suggested a model, which they called a Split-H model, to account for this behavior of elevated releases. A modified version of the Split-H model is included in the U.S. Nuclear Regulatory Commission (NRC) Regulatory Guide 1.111 (NRC 1977c) and is implemented in the XOQDOQ model (Sagendorf, Goll, and Sandusky 1982), which is used in evaluating the consequences of routine releases from nuclear power plants. The NRC implementation of the Split-H model is included in the GENII building-wake model.

The Split-H model is applied to releases in which the actual release height is equal to or greater than the height of the tallest building in the area. Assuming this condition, a release is considered to be elevated when the ratio of vertical velocity to wind speed is equal to or greater than 5. If this ratio is between 1 and 5, the concentration is computed assuming that a portion of the release is elevated and the remainder is at ground level. Otherwise, the ratio is less than 1, and the release is considered to be a ground-level release.

The exact form of the NRC implementation of the model is

$$\bar{\chi}/Q' = M(\bar{\chi}/Q')_{entr} + (1-M)\ (\bar{\chi}/Q')_{elev} \tag{4.3.25}$$

where $\bar{\chi}/Q'$ = the normalized concentration predicted by the Split-H model

M = the fraction of time that the plume is entrained in the building wake

$(\bar{\chi}/Q')_{entr}$ = the normalized concentration in the building wake predicted for a ground-level release

$(\bar{\chi}/Q')_{elev}$ = the normalized concentration at ground level predicted for an elevated release.

The fraction of the time that the plume is entrained in the wake is estimated from the ratio of the effluent vertical velocity (w_o) to the release height wind speed (U_r) according to:

$$M = \begin{cases} 1 & w_o/U_r < 1.0 \\ 2.58 - 1.58\ (w_o/U_r) & 1.0 <= w_o/U_r < 1.5 \\ 0.3 - 0.06\ (w_o/U_r) & 1.5 <= w_o/U_r < 5.0 \\ 0 & w_o/U_r >= 5.0. \end{cases} \tag{4.3.26}$$

The 10-m wind speed is used in the GENII wake model except when the Split-H procedure is used. Then the release-height wind will be used to determine the fraction of time that the release is in the wake and will be used to estimate diffusion when the plume escapes the wake.

4.3.5 Deposition and Depletion

To estimate doses to individuals from contaminated soil and the farm product ingestion pathway, it is necessary to first estimate the amount of each radionuclide deposited on the ground. Two deposition mechanisms are frequently included in atmospheric models. The first mechanism, dry deposition, involves the settling of material on a surface as a result of gravitation and turbulent transport. In the second mechanism, called wet deposition, precipitation such as rain forms with particulate material, collides with particles, or absorbs gases and then carries the material to the surface. Wet deposition occurs during precipitation and results in a higher rate of surface contamination than dry deposition. However, dry deposition occurs whenever the concentration of material near the surface is greater than zero. As a result, in the vicinity of a source of routine release of radioactive nuclides, dry deposition is likely to be the primary process by which contamination occurs. Because of the infrequent precipitation in the Hanford environment, wet deposition is not considered further.

Although the deposition rate may be of some interest, the dose rate due to deposited material is a function of the total deposited material. The total surface contamination is given by

$$C_s = \bar{\chi}\, v_d\, t \qquad (4.3.27)$$

where C_s = the surface contamination (Ci/m^2)
v_d = the deposition velocity (m/sec)
$\bar{\chi}$ = the average air concentration (Ci/m^3)
t = the time period for which the average concentration was computed (sec).

The deposition velocity is a constant of proportionality between surface contamination rate and the concentration of contaminants in air. Deposition velocity depends on the substance and the surface, and the values of deposition velocity cover a wide range. Sehmel (1980, 1984) summarizes reported deposition velocities for many substances including iodine. For noble gases, a deposition velocity of zero is used; for most particulates, a deposition

velocity of 0.001 m/sec is used; and for iodines, a deposition velocity of 0.01 m/sec is used.

Deposition on surfaces results in depletion of material from the plume. Although several methods exist to account for this depletion, they are generally not incorporated in simple atmospheric models even when deposition is included. As a result, air concentration estimated by simple models are biased to the high side.

4.3.6 Wind Profiles

The algorithms within the GENII code are based on wind speeds at specific heights. The height at which meteorological data have been obtained may or may not correspond to heights appropriate for the use in GENII. Consequently, a set of algorithms is provided within GENII to adjust wind speeds from the height of measurement to the height required. The algorithms are based on the diabatic wind profile model described by Panofsky and Dutton (1984). In this model, wind speed is a function of height above ground, surface roughness, the characteristic turbulence velocity, and a characteristic length associated with the atmospheric boundary layer.

The general form of the wind profile model is

$$U(z) = \frac{u^*}{0.4} \ln \left(\frac{z}{z_0} - \Psi \right) \tag{4.3.28}$$

where $U(z)$ = the wind speed at height z (m/sec)

u^* = the characteristic velocity (m/sec)

z = the height above ground (m)

z_0 = the surface roughness length (cm)

Ψ = a dimensionless empirical function of the ratio between the height above ground and the characteristic length, L, associated with the atmospheric boundary layer called the Monin-Obukov length (Golder 1972).

The Monin-Obukov length is positive for stable atmospheric conditions, negative for unstable conditions, and infinite for neutral conditions. Estimates of L^{-1} used in GENII are based on Golder (1972) which relates the

inverse of the Monin-Obukov length to stability class and surface roughness length.

Wind profile data have been used to evaluate Ψ, which is a function of stability. For neutral stability, Ψ is equal to zero, and Equation (4.3.28) simplifies to the familiar logarithmic profile. For stable atmospheric conditions, Ψ is defined by

$$\Psi = -5\ z/L \tag{4.3.29}$$

where L is the Monin-Obukov length in meters. The definition of Ψ for unstable conditions is considerably more complex. It is

$$\Psi = \ln\left[\left(0.5 + \frac{\phi^2}{2}\right)\left(0.5 + \frac{\phi}{2}\right)^2 - 2\ \mathrm{Atan}\ \phi + \frac{}{2}\right] \tag{4.3.30}$$

where ϕ is defined as

$$\phi = (1 - 16\ z/L)^{1/4} \tag{4.3.31}$$

4.3.7 Atmospheric Dispersion Model Limitations

The atmospheric dispersion models discussed are all simple models. They yield reasonable yet conservative concentration estimates, provided that they are not misapplied.

As a general rule, the use of Equations (4.3.1) and (4.3.9) should be limited to potential releases of 30 minutes to 4 hours in duration. Equations (4.3.10) and (4.3.11) can be used to assess the consequences of potential releases 2 to 8 hours in duration, and Equation (4.3.12) can be used for potential releases with duration of 4 hours and longer. The fact that these ranges overlap should not imply that the models will yield identical results for release durations that fall within the overlap; they won't. When a release duration falls within an overlap, the choice between alternative equations should be based on an evaluation of the physical situation being modeled, and this evaluation should consider the source characteristics and meteorological situation.

The derivation of the dispersion models explicitly includes the assumptions that the release is from a point source and that the effluent travels in a straight line once it is released. Considering the point source assumption, Equations (4.3.1) and (4.3.9) through (4.3.11) should not be used to estimate concentrations too near the source. For relatively small sources, the models may be applied to estimate concentrations as close to the source as 800 m. However, if the source is in or near large buildings, these models should not be used to estimate concentrations closer to the source than 1600 m. Considering the straight-line assumption, the equations should not be used to estimate concentrations further than 80 km from the source under ideal conditions of flat terrain and no systematic spatial variations of the wind field. If topographic features may alter the wind field, the models should not be used to estimate concentrations on the opposite side of the features from the source.

The release duration and travel time to the receptor should also be considered when determining a maximum range for estimating concentrations. If the release is short compared to the travel time, assuming that the effluent travels at the wind speed, the equations may not provide realistic estimates of the concentration. Similarly, if the time required for the effluent to travel from the source to the receptor is more than a few hours, atmospheric conditions will likely change sufficiently during the transit period to make the concentration estimates unrealistic. Specifically, concentrations from releases made near sunrise will be systematically overestimated, and concentrations for releases near sunset will be underestimated. These considerations are particularly important when using Equations (4.3.1), (4.3.9), (4.3.10), and (4.3.11).

Other meteorological conditions of concern in applying Equations (4.3.1), (4.3.9), (4.3.10), and (4.3.11) include drainage winds, passages of fronts and other storms, and periods of low wind speeds. Each of these conditions can result in a significant departure from the modeling assumption that the release takes place in meteorological conditions that are not a function of time. Low wind speeds pose a particular problem because 1) the wind direction becomes poorly defined as the speed decreases and 2) the equations become undefined mathematically.

4.4 AIR SUBMERSION

Persons submersed in a plume of airborne material will receive radiation exposure from gamma and x-rays emitted external to the body. This exposure is generally referred to as external dose from air submersion and is dependent upon the type of radiation, the energy of the radiation, and the spatial distribution of the airborne radionuclides surrounding the receptor. Two methods are available in GENII to estimate the dose: 1) the semi-infinite plume model and 2) the finite plume model.

The semi-infinite plume model is based on the assumption that the plume is semi-infinite in size (bounded by the ground plane) and that the energy deposition per unit volume of air is equal to the rate of energy emission per unit volume. In contrast, the finite plume model considers the size and shape of the plume to estimate the actual dose rate at the center of the plume at ground level. Both methods may be applied to acute and chronic release situations.

4.4.1 Semi-Infinite Plume Model

For acute releases of radionuclides, the semi-infinite plume model for the air submersion dose is represented as follows:

$$Dl_i = Q_i (E/Q)\ DF_{si} \tag{4.4.1}$$

where Dl_i = individual dose from external exposure to the plume for radionuclide i (rem)

Q_i = total activity of radionuclide i released during the acute release period (curies)

E/Q = acute release atmospheric dispersion factor at the exposure location (sec/m^3)

DF_{si} = submersion dose factor precalculated from EXTDF program (rem per Ci - sec/m^3).

For chronic releases, the air submersion dose is calculated similarly:

$$Dl_i = Q_i' (\bar{\chi}/Q')\ DF_{si} \tag{4.4.2}$$

where Q_i' is the annual average release rate of radionuclide i (Ci/year), $\bar{\chi}/Q'$ is chronic release atmospheric dispersion factor at the exposure location (sec/m^3), and other terms are as defined above for acute releases.

4.4.2 Finite Plume Model

When the finite plume model is used, the geometry must be considered in evaluating the exposure. The evaluation involves use of pre-calculated factors representing volume integrals over the plume dimensions. Parameters important to this evaluation are plume size, release height, wind speed, and photon energy. Two empirical models are available, one for acute releases based on the bivariate Gaussian plume model, and one for chronic releases based on the crosswind averaged (sector width) Gaussian dispersion model. The exposure may be represented as follows for acute releases:

$$Dl_i \equiv Q_i \sum_j DRA_j \, E_{ij} \, Fc_j \qquad (4.4.3)$$

where DRA_j = acute release finite plume dose rate factor for photons in energy group j at the exposure location (rad dis)/(MeV Ci)

E_{ij} = effective photon energy released by radionuclide i in energy group j (MeV/dis)

Fc_j = surface-dose-to-effective-dose equivalent conversion factor for photon energy group j (rem/rad).

The surface-dose-to-effective-dose-equivalent conversion factor converts from air dose to effective dose equivalent for photons in energy group j. The photon energy emission data are read from a data library which contains photon data grouped into the six energy groups indicated in Table 4.9. The table also gives the surface-dose-to-effective-dose-equivalent conversion factors for each energy group. Photon data for each radionuclide are contained in the data library.

TABLE 4.9. Photon Energy Group Definitions and Conversion Factors Used in Finite-Plume Air Submersion Calculations

Group	Photon Energy Range, MeV	Average Photon Energy, MeV	Surface Dose to EDE Factor, rem/rad
1	<0.3	0.15	0.67
2	0.3 - 0.5	0.40	0.66
3	0.5 - 1.0	0.75	0.67
4	1.0 - 1.5	1.25	0.71
5	1.5 - 2.0	1.75	0.75
6	>2.0	2.25	0.78

For chronic releases, the air submersion dose is evaluated as follows:

$$Dl_i = Q'_i \sum_j DRC_j \, E_{ij} \, Fc_j \tag{4.4.4}$$

where DRC_j is the chronic release finite plume dose rate factor for photons in energy group j at the exposure location (rad dis)/(MeV Ci).

The acute release model uses an empirical function to evaluate the finite plume dose factor (DRA_j), depending on plume size (σ_y and σ_z), plume release height (h_e), and photon energy (subscript j). The empirical function was developed from finite plume dose rate factors calculated using the computer program SUBDOSA (Strenge, Watson, and Houston 1975). The analysis used the curve fitting program SSQMIN (Brown and Lin 1973; Brown 1973) to evaluate the constants of the empirical function. For ground-level releases, the dose rate factor is evaluated as follows:

$$DRAo_j = K_j \, Ro_j/(2 \, \pi \, \sigma_y \, \sigma_z \, u) \tag{4.4.5}$$

where K_j = units conversion factor (rad m^3 dis)/(MeV sec Ci)

Ro_j = ground-level release finite-plume correction factor for energy group j (dimensionless)

σ_y = crosswind horizontal standard deviation of plume size at the downwind exposure location (m)

σ_z = crosswind vertical standard deviation of plume size at the

downwind exposure location (m)

u = average wind speed (m/sec).

The factor Ro_j is evaluated empirically as follows:

$$Ro_j = a_{1j} (\sigma_g)^{b_{1j}} \text{ for } \sigma_g \leq 100 \text{ meters}$$

$$Ro_j = a_{2j} (\sigma_g)^{b_{2j}} \text{ for } 100 < \sigma_g < 600 \text{ meters}$$

$$Ro_j \leq 1 \text{ for all } \sigma_g$$

where σ_g = geometric mean of plume dimensions (m)

$\sigma_g = (\sigma_y \sigma_z)^{1/2}$

a_{1j}, a_{2j}, b_{1j}, b_{2j} = empirical constants for energy group j.

Values for the empirical coefficients are given in Table 4.10.

For elevated releases, the dose rate factor is evaluated using the ground-level correction factor plus an effective release height as follows:

$$DRA_j = DRAo_j \exp[-(H_j^*)^2/(2\sigma_z)] \tag{4.4.6}$$

where H_j^* = effective plume height for energy group j (m)

$H_j^* = Ho_j \; h \; (\sigma_y/\sigma_z) \; P_j$

where h = effective release height (m)

TABLE 4.10 Empirical Constants for the Ground-Level Correction Factor, Ro_j

Energy Group	a_{1j}	a_{2j}	b_{1j}	b_{2j}
1	0.007062	0.9623	0.1651	0.2779
2	0.007915	0.9222	0.1514	0.2813
3	0.008279	0.8839	0.08769	0.3713
4	0.007696	0.8854	0.07532	0.3900
5	0.006964	0.8941	0.06136	0.4215
6	0.005852	0.9038	0.04238	0.4740

$$Ho_j = \begin{cases} 1 - d_j\ (h/\sigma_z)^{e_j} & \text{for } h/\sigma_z \leq 10 \\ f_j/(h/\sigma_z) & \text{for } h/\sigma_z > 10 \end{cases}$$

$$P_j = c_j \exp(-0.015\ \sigma_z)$$

where c_j, d_j, e_j, f_j are empirical constants for energy group j. Values for the empirical constants are given in Table 4.11.

TABLE 4.11. Empirical Constants for Effective Release Height, H_j^*

Energy Group	c_j	d_j	e_j	f_j
1	-0.19644	0.31637	0.38578	2.8173
2	-0.18854	0.29041	0.41921	2.8136
3	-0.18610	0.28409	0.42522	2.8053
4	-0.18601	0.28408	0.42532	2.8049
5	-0.18660	0.28414	0.42572	2.8039
6	-0.18710	0.28418	0.42610	2.8031

A similar empirical model is used to evaluate the finite plume dose rate factors for chronic releases (DRC_j). However, the release height dependence is handled differently, in that the empirical representation is defined for specific release height values. Preliminary evaluation of dose rate factors is made for the specific release heights, and these factors are then interpolated to provide dose rate factors for the desired release height. The empirical function development for chronic release dose rate factors is based on calculations performed using the KRONIC subprogram FDOSE (Strenge and Watson 1973) which performs the dose rate integration over the sector-averaged plume volume.

For ground-level releases, the dose rate factors are evaluated as follows for values of $\sigma_z \leq 200$ meters:

$$DRCo_j = K_j\ [A_j + x_3 \ln \sigma_z] \tag{4.4.7}$$

where $A_j = \begin{cases} x_2 & \text{when } x > 900 \text{ meters} \\ x_4 + x_1 \ln x & \text{when } x \leq 900 \text{ meters} \end{cases}$

$[A_j + \ln \sigma_z] \leq 1.0$

and as follows for values of $\sigma_z > 200$ meters:

$$DRCo_j = x_5/(\sigma_z W) \tag{4.4.8}$$

where $DRCo_j$ = ground-level dose rate factor for photons in energy group j (rem dis)/(MeV Ci)

x = downwind distance (meters)

W = sector width at downwind distance x (meters)

K_j, x_1, x_2, x_3, x_4, x_5 = empirical constants.

Value s for the empirical constants are given in Table 4.12.

The user must perform the following steps in evaluating chronic dose rate factors for elevated releases:

1. If $\sigma z < S1_h$, set $\sigma_z = S1_h$.
2. If $\sigma_z < S2_h$, set xx = maximum of x and 2000 meters.
   and if $\sigma_z < S3_h$, $EF = X1_{hj} + X2_{hj} \ln(xx)$.
   or if $\sigma_z \geq S3_h$, $EF = EF\ (X4_{hj} + X5_{hj}\ xx)$
   Using these values,
   $$DRC_{hj} = 0.398942\ FK_j\ \sigma_z\ X3hj\ EF/(W\ \sigma_z)$$
   This completes the evaluation when $\sigma_z < S2_h$.
3. If $\sigma_z \geq S2_h$ <u>and</u> $\sigma_z < S4_h$,
   and if $x > Dx_{hj}$,
   evaluate $EG = \exp[X6_{hj} + X7_{hj} \ln \sigma_z]$ if $x > Dx_{hj}$.
   Otherwise, $EG = X8_{hj}\ (x^{X9_{hj}}) \exp(X6_{hj} + X7_{hj} \ln \sigma_z)$
   and then evaluate
   $$DRC_{jh} = 0.398942\ FK_j\ \sigma_z\ EG/(W\ \sigma_z)$$
   This completes the evaluation when $S2_h \leq \sigma_z < S4_h$.
4. If $\sigma_z \geq S4_h$,
   $$DRC_{hj} = A_{hj}/(W\ \sigma_z)$$

TABLE 4.12. Empirical Constants for Ground-Level Sector Dose Rate Factors

Energy Group	A_k	x1	x2	x3	x4	x5
1	0.0040	0.2154	1.232	-0.1732	-0.1374	0.191
2	0.0038	0.2056	1.328	-0.2005	0.0005606	0.199
3	0.0038	0.1763	1.246	-0.1961	0.1066	0.182
4	0.0036	0.1763	1.246	-0.1961	0.1066	0.182
5	0.00342	0.1745	1.207	-0.1888	0.07537	0.182
6	0.00342	0.1500	1.0385	-0.1609	0.05711	0.182

Parameters in the above calculational steps are previously defined in addition to the empirical constants A_{hj}, Dx_{hj}, $S1_h$ through $S4_h$, and $X1_{hj}$ through $X9_{hj}$. Values for the "S" constants (dependent only on release height) are given in Table 4.13. Values for A_{hj}, Dx_{hj}, and $X1_{hj}$ through $X9_{hj}$ are given in Tables 4.14 through 4.24, respectively.

TABLE 4.13. Values for "S" Parameters

Release Height Meters	Release Height Index	$S1_h$	$S2_h$	$S3_h$	$S4_h$
50	1	5	80	20	400
100	2	15	100	30	300
150	3	30	150	30	400
200	4	53	150	40	500
250	5	60	150	40	500

TABLE 4.14. Parameter A_{hj} Values

Release Height Meters	Index	Energy Group Index 1	2	3	4	5	6
50	1	0.1909	0.1995	0.1930	0.1897	0.1888	0.1916
100	2	0.1904	0.1947	0.1947	0.1908	0.1908	0.1927
150	3	0.1909	0.1974	0.1905	0.1875	0.1897	0.1914
200	4	0.1900	0.1971	0.1902	0.1873	0.1893	0.1914
250	5	0.1897	0.1968	0.1899	0.1870	0.1890	0.1911

TABLE 4.15. Parameter Dx_{hj} Values

Release Height Meters	Index	Energy Group Index 1	2	3	4	5	6
50	1	900	1000	950	1200	1150	1500
100	2	0	0	0	0	0	0
150	3	250	0	0	0	0	0
200	4	0	0	0	0	0	0
250	5	0	0	0	0	0	0

TABLE 4.16. Parameter Xl_{hj} Values

Release Height Meters	Index	Energy Group Index 1	2	3	4	5	6
50	1	-0.0079836	-0.0068464	-0.0052439	-0.0051147	-0.0048566	-0.0043104
100	2	-0.002566	-0.002611	-0.002612	-0.002612	-0.0025281	-0.001543
150	3	-0.0003225	-0.0004380	-0.0003760	-0.0003687	-0.0003970	-0.0004192
200	4	-0.0000072393	-0.0000218405	-0.0000287361	-0.0000315728	-0.000055851	-0.000055851
250	5	-2.78157E-7	-2.1792E-6	-5.79535E-6	-7.382326E-6	-1.12916E-5	-1.99375E-5

TABLE 4.17. Parameter $X2_{hj}$ Values

Release Height Meters	Release Height Index	Energy Group Index 1	2	3	4	5	6
50	1	0.0020302	0.0017336	0.0013365	0.0012986	0.0012306	0.0010886
100	2	0.0006260	0.0006320	0.0006176	0.0006642	0.00060655	0.0003799
150	3	0.00007903	0.0001071	0.000091789	0.0000901	0.00009696	0.00010234
200	4	0.0000017612	0.000005309	0.0000069799	0.0000076741	0.0000135817	0.0000135817
250	5	6.71701113E-8	5.25722E-7	1.39556E-6	1.78079E-6	2.72453E-6	4.815094E-6

TABLE 4.18. Parameter $X3_{hj}$ Values

Release Height Meters	Release Height Index	Energy Group Index 1	2	3	4	5	6
50	1	1.10853	1.12874	1.16066	1.15024	1.14787	1.14342
100	2	1.2196	1.200	1.200	1.200	1.1124	1.167
150	3	1.51233	1.43132	1.42964	1.41711	1.3893	1.35022
200	4	2.193499	1.95538	1.86565	1.832157	1.679025	1.679025
250	5	2.76218724	2.337204	2.109784	2.045505	1.950043	1.811961

TABLE 4.19. Parameter $X4_{hj}$ Values

Release Height Meters	Release Height Index	Energy Group Index 1	2	3	4	5	6
50	1	1.06496	1.05508	1.03420	1.0384	1.03637	1.036195
100	2	1.243	1.244	1.244	1.244	1.3268	1.3207
150	3	1.36939	1.37817	1.3972	1.3934	1.38817	1.37466
200	4	1.48126	1.45935	1.48287	1.457285	1.416737	1.416737
250	5	1.50715482	1.462071	1.4591397	1.430768	1.410792	1.376726

TABLE 4.20. Parameter $X5_{hj}$ Values

Release Height Meters	Index	Energy Group Index 1	2	3	4	5	6
50	1	-0.00014497	-0.000120429	-0.000107396	-0.000102495	-0.000089844	-0.0000729814
100	2	-0.0001404	-0.00009759	-0.00009817	-1.E-8	-0.0000285	-0.00008758
150	3	-0.000060141	0.000016914	0.00006756	0.000113459	0.00015535	0.00023030
200	4	-0.0000100728	0.000094251	0.000178964	0.000241717	0.000401386	0.000401386
250	5	2.31697304E-5	1.41925E-4	2.52501E-4	3.34745E-4	4.020886E-4	5.244587E-4

TABLE 4.21. Parameter $X6_{hj}$ Values

Release Height Meters	Index	Energy Group Index 1	2	3	4	5	6
50	1	-2.2101	-2.2101	-2.2827	-2.33404	-2.411	-2.411
100	2	-2.51	-2.51	-2.622	-2.622	-2.622	-2.6173
150	3	-2.83872	-2.83001	-2.86357	-2.87222	-2.88118	-2.90774
200	4	-3.20158	-3.19662	-3.17113	-3.12888	-2.819186	-2.819186
250	5	-4.11710167	-4.002866	-3.882893	-3.809661	-3.688744	-3.434422

TABLE 4.22. Parameter $X7_{hj}$ Values

Release Height Meters	Index	Energy Group Index 1	2	3	4	5	6
50	1	-0.6205	-0.6205	-0.6205	-0.6205	-0.6205	-0.6205
100	2	-0.568	-0.568	-0.568	-0.568	-0.568	-0.5843
150	3	-0.53759	-0.53616	-0.54130	-0.54504	-0.54449	-0.54523
200	4	-0.49928	-0.49664	-0.51172	-0.52408	-0.58410	-0.58410
250	5	-0.3576202	-0.37317	-0.40363	-0.42112	-0.44262	-0.49152

TABLE 4.23. Parameter $X8_{hj}$ Values

Release Height		Energy Group Index					
Meters	Index	1	2	3	4	5	6
50	1	0.1525	0.10602	0.10084	0.08425	0.07891	0.0587
100	2	0	0	0	0	0	0
150	3	0.950	0	0	0	0	0
200	4	0	0	0	0	0	0
250	5	0	0	0	0	0	0

TABLE 4.24. Parameter $X9_{hj}$ Values

Release Height		Energy Group Index					
Meters	Index	1	2	3	4	5	6
50	1	0.2761	0.3231	0.32880	0.3470	0.3607	0.3877
100	2	0	0	0	0	0	0
150	3	0	0	0	0	0	0
200	4	0	0	0	0	0	0
250	5	0	0	0	0	0	0

4.5 SURFACE WATER TRANSPORT MODELS

Optional surface water transport models are available in the GENII computer package for estimating, at selected water usage locations, the water concentration resulting from releases of radionuclides to nontidal rivers and near-shore lake environments. The mathematical models are the same as those employed in the LADTAP II computer program (Strenge, Peloquin, and Whelan 1986), which are based on work of Whelan as described a report by Codell, Key, and Whelan (1982). Nontidal rivers are freshwater bodies with unidirectional flow in definable channels. Near-shore lake environments are surface water areas that are near the shores of large open bodies of water and that have a straight shoreline, constant depth, and steady-state, unidirectional flow parallel to the shore.

The results of the surface water transport calculations are given in the form of a mixing ratio. The mixing ratio is the ratio of concentration at the usage location divided by the initial concentration. The ratio includes the effect of dispersion and transport. Effects of radiological decay are not considered in the surface water models but may be included separately by applying decay corrections based on transport time.

The surface water program solves for radionuclide concentrations in a river or large lake under the following limiting assumptions (Codell, Key, and Whelan 1982):

- constant flow depth
- constant downstream or longshore velocity
- straight river channel
- constant lateral dispersion coefficient
- continuous point discharge release of effluents
- constant river width.

Codell, Key, and Whelan (1982) note that applications of models similar to those described here should be restricted to those portions of the near-shore zone of a river or lake that are removed from the influence of the discharge. Initial dilution near the point of discharge is usually controlled by the momentum effects of jets.

For nontidal rivers, the assumed release point is on the near shore of the river with the water plant intake point located at a downstream distance x and a laterally offshore distance y. The water concentration (steady-state) at the downstream location is given by the following equation (NRC 1977b; Codell, Key, and Whelan 1982):

$$C = \frac{Q_b C_o}{udB} \left\{ 1 + 2 \sum_{i=1}^{\infty} \left[\exp - \left(\frac{i\pi}{udB} \right)^2 E_y u d^2 x \right] \cos \left(\frac{i\pi y}{B} \right) \right\} \qquad (4.5.1)$$

where C = water concentration at the downstream location (defined by x and y), after continuous release for a given time period (Ci/L)

B = constant river width (m)

C_o = initial concentration of effluent entering the water body (Ci/L)

d = constant flow depth (m)

E_y = constant lateral turbulent dispersion coefficient (m^2/sec)

Q_b = effluent discharge rate to the receiving water body (m^3/sec)

u = average flow velocity (m/sec)

x = longitudinal (downstream) distance to location of interest (m)

y = lateral distance to water intake point from the near shore (m).

The mixing ratio is calculated as the ratio of C to C_o.

When the dilution volume is used, the water concentration is calculated as follows:

$$Cw_i = \frac{Q'w_i}{RV} \qquad (4.5.2)$$

where $Q'w_i$ is the release rate of radionuclide i to the surface water body (Ci/sec), and V is the dilution volume for the receiving water body representative of the usage location (L/sec).

The dilution volume is equivalent to a river flow rate. This representative is available for use with all exposure pathways associated with contaminated water usage.

Acute surface water releases are considered by allowing the calculation of a time-integrated water concentration, E_w, (equivalent to the E/Q used in atmospheric transport) as

$$E_{w_i} = \frac{Q'w_i}{V} dt = \frac{Qw_i}{V} \tag{4.5.3}$$

Near-shore lake environments are described by a model similar to the river model. The NRC (1977b) has suggested use of a quasi-steady-state model valid for simulating contaminant transport in near-shore lake environments for distances up to 16 miles. The model is represented by the following equation:

$$C = \left(\frac{C_o Q_b}{(\pi x E_y E_z)^{\frac{1}{2}}}\right) \exp\left[-\frac{y^2 u}{4xE_y}\right] \sum_{i=-\infty}^{+\infty} \exp\left[-\frac{(2id - z)^2 u}{4xE_z}\right] \tag{4.5.4}$$

where E_z is the vertical turbulent dispersion coefficient (m^2/sec), z is the depth of discharge (m), and other terms are as previously defined.

To use Equations (4.5.1) and/or (4.5.4) in any analysis, the lateral (i.e., transverse) and vertical dispersion coefficients must be defined. Dispersion coefficients should be obtained by site-specific tracer studies whenever possible. Accurately defining dispersion coefficients for all riverain or lake environments under all conditions is difficult, if not impossible at this time. However, rough estimates can be defined. The coefficients are defined such that representative properties of the water body are considered when estimating.

If the absence of site-specific estimates of dispersion coefficients (Strenge, Peloquin, and Whelan 1986) has suggested use of the following expressions:

$$E_y = 0.06 \text{ du} \tag{4.5.5}$$

and

$$E_z = 0.0059 \text{ du} \tag{4.5.6}$$

Even though Equations (4.5.5) and (4.5.6) were developed for rivers, they are also suggested for use with near-shore lake environments.

4.6 SOIL CONTAMINATION MODEL

The GENII code simultaneously considers soils in three separate areas: residential soils, non-agricultural soils, and agricultural soils. The non-agricultural soils are used only in near-field scenarios for defining parameters for arid and humid climate biotic transport. Upon the initiation of human use of the soils, the soil reverts to either residential, if the person lives there, or agricultural, if he grows crops there. Each food pathway has its own associated soil, so a large number of soil zones can be active in a single simulation. A single soil zone is made up of from one to three compartments, as illustrated in Figure 4.6.

The surface soil is the portion on which deposition from the atmosphere and irrigation occurs, and that from which resuspension occurs. For most far-field scenarios, it is the only portion of the soil model that is used. Radionuclides may be lost from the surface soil through harvest removal, radiological decay, and leaching to deeper soil layers. In situations where subsurface contamination exists, radionuclides may be contained in waste packages or simply distributed in the soil. If the waste is in a package, it may be released to the soil using the waste package decomposition model. Radionuclides in the available subsurface soil (those not in packages) may be transported to the surface soils by root uptake by plants, by physical transport by native animals, or by human interactions through intrusion into the waste which result in redistribution of waste from deep to surface soil.

Although the model explicitly considers three compartments, the fourth is conceptually an uncontaminated layer in between the surface and deep soils. Although neglected in the model, the existence of such a layer may be easily simulated by appropriate application of rooting depth fractions (described in Section 4.7). A fraction of plant roots may be described as located in the surface soil layer, and another fraction as located in the deep soil. These two fractions may add to less than one if a clean soil layer intervenes.

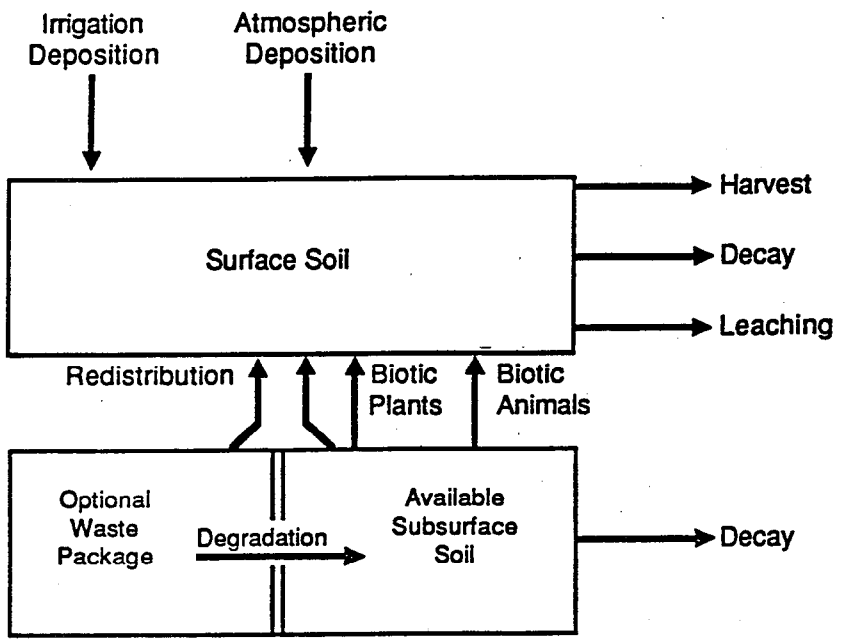

FIGURE 4.6. Schematic of Soil Compartment Interactions

4.6.1 Deposition Rates

For the air deposition pathway, the deposition rate, Du_i, is calculated from the air concentration and an average deposition velocity as

$$Du_i = Ca_i \, Vd_i \tag{4.6.1}$$

where Vd_i is the deposition velocity for radionuclide (m/sec).

For the water pathways, the deposition rate is calculated from the irrigation rate and water concentration as

$$Du_i = 25.4 \, Cw_i \, I/(2.592 \cdot 10^6 \, MY) \tag{4.6.2}$$

where I = irrigation water application rate (in./yr)

$2.592 \cdot 10^6$ = units conversion factor (sec/mo)

25.4 = number of liters in 1 in. applied over 1 m^2

MY = number of mo/yr that irrigation occurs.

4.6.2 Removal Rates

Radiological chain decay from each of the soil compartments is handled with the GENII chain decay processor. The soil compartment for each food type, animal type, and residential exposure is treated separately.

Removal from the surface soils through leaching into deeper soils is treated by means of a soil removal rate constant, λ_{wi}, which is a correction for long-term leaching of deposited radionuclides out of the surface soil rooting and resuspension zones. The values for λ_{wi} are calculated using the formula of Baes and Sharp (1981):

$$\lambda_{wi} = \frac{P + I - E}{d\,(1 + \rho/\theta\ kd_i)} \tag{4.6.3}$$

where
- P = total precipitation (cm/yr)
- I = total irrigation (cm/yr)
- E = total evapotranspiration (cm/yr)
- d = depth of the rooting zone (cm)
- ρ = soil bulk density (g/cm^3)
- θ = soil volumetric water content (mL/cm^3)
- kd_i = distribution coefficient for isotope i (mL/g).

For simplicity, the term P + E - I is approximated as an overwatering term, implying about 15 cm/yr of percolation through the rooting zone and into deeper soil layers. The depth, d, is defined as 15 cm to be compatible with other portions of the code. Baes and Sharp (1981) show that the term ρ/θ averages about 3. Thus the soil removal constant for percolation can be considered as inversely proportional to the soil distribution coefficient, kd_i. The values used in GENII are based on the most conservative (i.e., largest) value of kd_i identified in a wide range of literature.

Harvest removal is simulated as a discrete process at the end of each calculational year. A quantity of each radionuclide equal to the product of the calculated vegetation concentration due to root uptake times the harvested yield (an input) is subtracted from the soil compartments. The subtraction is normalized by the root penetration factor.

4.6.3 Biotic Transport

Models are included to estimate the transport of radioactivity between soil layers by plants and animals. These models were developed to estimate potential radiation dose to man resulting from biotic transport of activity at low-level radioactive waste burial sites (McKenzie et al. 1986). Biotic pathways include translocation by plant root systems and by burrowing insects and small mammals. Examples of plants include grass, shrubs, and trees; examples of insects and mammals include pocket mice, badgers, harvester ants, and field mice.

Transport of activity by insects and mammals is described by the following simplified model:

$$Qs_{ni} = \sum_{j=i}^{a} Cs_{ni} M_{jn} \qquad (4.6.4)$$

where Qs_{ni} = the quantity of radionuclide i moved to the surface per year from soil stratum n (Ci/m^2 yr)

a = number of animal species considered

Cs_{ni} = concentration of radionuclide i in soil stratum n (Ci/m^3)

M_{jn} = mass of soil moved from soil stratum n to the surface by animal j (m^3/ha yr).

The burrowing activity is assumed to result in excavation of soil, all of which is deposited on the surface soil layer.

The transfer of activity by plants to the surface is estimated as follows:

$$QP_{ni} = \sum_{l=1}^{P} Cs_{ni} Bv_i R_{ln} B_l/K \qquad (4.6.5)$$

where QP_{ni} = quantity of radionuclide i moved from soil stratum u to the surface per year (Ci/m^2 yr)

P = number of plant species considered

Bv_i = soil-to-plant transfer factor (Ci/g plant per Ci/g soil)

R_{ln} = fraction of roots of plant l in soil stratum n (dimensionless)

B_l = total biomass production of plant l for a year (g/m^2 yr)

K = soil density (Kg/m3).

The quantity of activity brought to the surface is assumed to be uniformly distributed in the surface soil and available for entry into plant and animal product pathways in subsequent years. Other exposures include external dose from ground surface contamination and inhalation of suspended activity.

4.6.4 Manual Redistribution

Transport of material from the deep soil or contained waste compartments to the surface soils may occur via human disruption of a site. This is modeled simply using a manual redistribution factor. The manual redistribution factor relates the resultant surface soil concentration, in Ci/m^2, to the initial subsurface concentration, in Ci/m^3. Because the surface soil is modeled as a slab 15 cm thick, a scenario in which deep soils are brought up and overlay the previous surface would use a manual redistribution factor of 0.15 (e.g., 0.15 m^3 of deep soil is required to provide a 15-cm-thick layer over one m^2). Scenarios that result in proportionately less redistribution would be simple multiples of this value.

4.7 TERRESTRIAL EXPOSURE PATHWAYS

This section presents the environmental transport pathway models selected to estimate exposure of individuals or populations from releases of radionuclides to air or water. The primary exposure modes considered are inhalation, external exposure, and ingestion. The exposure analysis begins with environmental concentrations predicted by air and water transport models. Output from the exposure analysis is an estimate of the effective dose equivalent for either a maximally exposed individual or the collective dose to a defined population group. Optional input is that of radionuclide concentrations in various exposure pathway media derived from environmental monitoring data.

The mathematical models for the environmental transport pathway analysis are described in this section in general terms with emphasis given to definition of parameter requirements. For readability, activity units are show in this section as curies, although the code actually functions in "units of activity" (UoA), which are converted to becquerels or curies as required. Models are included for the major routes of transport of radionuclides from the release point to the point of intake or exposure by humans. The models used are generally of the type called the "concentration factor method" by ICRP 29 (1979b). The relationships between the environmental concentrations and human exposures are illustrated in Figure 2.1 on page 2.4. The four "transport" boxes on the left of the figure indicate the input to the terrestrial exposure analysis. The exposure pathways represented in this figure include the following:

- inhalation - primary mode of exposure for the air transport pathway
- drinking water ingestion - from all three water transport pathways
- aquatic food ingestion - from fish and shellfish produced in water contaminated from overland or surface water transport pathways
- crop ingestion - from farmlands contaminated by air transport and deposition, or from irrigation using water contaminated from the water transport pathways
- animal product ingestion - from animals fed contaminated crops (all transport pathways) or contaminated water (water transport pathways)
- external exposure to radionuclides - from contaminated air or soil (air transport pathway) and from aquatic recreational activities (swimming, boating, and shoreline activities for surface water transport pathways).

In the following discussions, the concentration of a radionuclide in air or water is assumed to be the starting point in the environmental transport analysis. For air pathways, the concentration may be represented in three forms, as follows:

1. average concentration, Ca_i, for time period, t

2. long-term time-integrated air concentration, $\bar{\chi}/Q' \times Q'$
3. short-term time-integrated air concentration, $E/Q \times Q$.

Each of these representations has equivalent units of Ci sec/m^3. These units are derived for the first representation by multiplying the air concentration by the exposure period, $Ca_i \times t$.

Chronic water pathways are represented by the average water concentration, Cw_i, for radionuclide i existing over the exposure period. This concentration is supplied as input to the program or is estimated from a relatively simple relationship as indicated in Section 4.5. Acute releases are represented by the time-integrated water concentration, Ew, in Ci-sec/L. No ground water or overland water transport models are included in this program.

Mathematical models and parameters required for each model are defined for each exposure pathway in the discussions below. The dose to an individual is the output of the exposure models. For simplicity, the dose parameters are referred to as "dose". Actually, the calculations are implemented to give dose as well as effective dose equivalent to selected organs. The dose conversion factors may be defined for whatever uptake and commitment period necessary, as specified by the user, for the particular case being analyzed. The representations in the equations, therefore, do not mention the uptake or commitment periods as such, but assume that appropriate factors will be used for the particular calculation being performed.

The formulations are complete, in that they all relate directly to dose. The coded equations are, in many cases, fragmented to allow more efficient use of intermediate parameters. Some equations given here have been simplified to eliminate unit conversion factors. The actual equations as coded are given in the hand-calculation worksheets supplied in the GENII Code Maintenance Manual, Volume 3 of this set of documentation.

4.7.1 Inhalation

Inhalation exposure may result from inhalations of the passing plume or from inhalation of resuspended activity. The dose to an individual from

inhalation of contaminated air is calculated from the individual ventilation rate and the air concentration parameter.

$$Dn_i = 3.15 \cdot 10^7 \; B \; Ca_i \; f \; Dh_i \qquad (4.7.1a)$$

$$Dn_i = 3.15 \cdot 10^7 \; B \; Q' \; \overline{\chi}/Q' \; Dh_i \qquad (4.7.1b)$$

or

$$Dn_i = B \; Q \; E/Q \; fc \; Dh_i \qquad (4.7.1c)$$

where Dn_i = individual dose from inhalation (rem/yr)

$3.15 \cdot 10^7$ = the number of seconds in a year

B = ventilation (breathing) rate for exposed individuals (m^3/sec)

Ca_i = average air concentration of radionuclide i (Ci/m^3)

Dh_i = inhalation dose conversion factor for radionuclide i (rem per Ci inhaled)

f = fraction of year exposed to inhalation (dimensionless)

E/Q = short-term normalized time-integrated air concentration (sec/m^3)

$\overline{\chi}/Q'$ = long-term normalized time-integrated air concentration (sec/m^3)

Q = total release of radionuclide i (Ci)

Q' = average release rate of radionuclide i (Ci/sec)

fc = fraction of acute plume passage time spent in cloud (dimensionless).

Inhalation of resuspended activity uses the first form of the above representation (Equation 4.7.1a) with the air concentration estimated from either a resuspension factor or mass loading considerations. These methods are based on the assumption that the particulate matter in the air has the same activity as the soil at the location. This is represented mathematically using a resuspension factor as follows:

$$Ca_i = M \; Cs_i \qquad (4.7.2)$$

where M is the resuspension factor (m^{-1}) and Cs_i is the soil concentration of radionuclide i (Ci/m^2).

The resuspension factor may be estimated in one of two ways - either by using a time-dependent function developed by Anspaugh et al. (1975) or by means of a mass loading factor. The Anspaugh resuspension factor is given as:

$$M = 10^{-4} \exp(-0.15 \sqrt{t}) + 10^{-9} \qquad (4.7.3a)$$

where M = resuspension factor (m^{-1})

10^{-4} = resuspension factor at time $t = 0$ (m^{-1})

0.15 = effective decay constant controlling the availability of material for resuspension ($day^{1/2}$)

t = time after deposition (days)

10^{-9} = resuspension factor after 17 years (m^{-1}).

The second term in Equation (4.7.3a), 10^{-9}, is added based on the assumption that no further measurable decrease in the resuspension factor process occurs after about 17 years, the longest period for which there are data available.

Alternatively, the resuspension factor may be calculated from the atmospheric mass loading as

$$M = S/\rho \qquad (4.7.3b)$$

where S = mass loading of soil in air (g/m^3)

ρ = soil surface density (g/m^2). A standard value of 224,000 g/m^2 to a depth of 15 cm is used.

Evaluation of the soil concentration was described in Section 4.6.

4.7.2 Drinking Water Ingestion

Exposure to radionuclides by means of the drinking water ingestion pathway may result from the ground water or surface water transport pathways. The overland transport pathway may contribute to contamination in surface water systems and thus indirectly contribute to drinking water ingestion of radionuclides (as indicated in Figure 2.1). The dose from the ingestion of water is calculated from the water concentration, water ingestion rate, a water treatment factor, and a decay correction (for transport through the

water distribution system). The dose to an individual using a contaminated domestic water supply is calculated as follows:

$$Dw_i = Uw\ Cw_i\ Tf_i\ \exp(-\lambda_i\ tp)\ Dg_i \tag{4.7.4a}$$

$$Dw_i = Uw\ Ew_i\ Tf_i\ \exp(-\lambda_i\ tp)\ Dg_i \tag{4.7.4b}$$

where Dw_i = individual dose from water ingestion for radionuclide i (rem/yr)

Uw = water-intake rate for an individual (L/yr)

Cw_i = water concentration of radionuclide i (Ci/L)

Dg_i = ingestion dose conversion factor for radionuclide i (rem per Ci ingested)

Tf_i = water treatment purification factor, fraction of contaminant remaining after treatment for radionuclide i (dimensionless)

λ_i = radiological decay constant for radionuclide i (sec^{-1})

tp = time of transit through the water distribution system (sec)

Ew_i = time integrated water concentration (Ci sec/L).

The water concentration, Cw_i, represents the concentration at the usage location. This concentration can either be provided directly as input or estimated as shown in Section 4.5.

The water treatment purification factor accounts for removal of radionuclides during treatment in municipal water supply facilities. If no water treatment is performed, then the purification factor is 1. The daily water intake rate is dependent on the type of calculation being performed. For an individual at maximal exposure, a higher value is generally assumed than for an average individual or population analysis. Inadvertent ingestion of water during bathing could be represented by an increment to the daily intake rate. However, the amount is considered small (0.01 L/d) compared to the daily average intake from drinking water (2 L/d) and is not included in this analysis.

4.7.3 Aquatic Food Ingestion

Ingestion of contaminated aquatic foods is an exposure pathway considered for the surface-water transport pathways. Four types of aquatic foods are considered: fish, mollusks, invertebrates, and water plants. Fish represent organisms exposed in free-flowing rivers, lakes, or sea coasts. Mollusks and invertebrates represent organisms that live in water and feed in sediments. The radionuclide concentration in these organisms is related to the contaminant water concentration through bioaccumulation factors. The individual dose from chronic ingestion of aquatic foods is calculated for the water concentration and uptake rates as follows:

$$Da_i = \sum_{f=1}^{n} U_f \, Cw_i \, B_{if} \exp(-\lambda_i \, tp) \, Dg_i \qquad (4.7.5a)$$

where Da_i = individual dose from aquatic food ingestion for radionuclide i (rem)

Cw_i = water concentration (Ci/L)

B_{if} = bioaccumulation factor for aquatic food f (L/kg)

n = number of aquatic food types ingested

tp = time for decay from food harvest to consumption (sec)

U_f = consumption rate of aquatic food f, for individuals (kg/d).

For acute exposures, for a time-integrated water concentration of Ew_i, the dose is given as

$$Da_i = \sum_{f=1}^{n} U_f \, Ew_i \, B_{if} \exp(-\lambda_i \, tp) \, Dg_i \qquad (4.7.5b)$$

4.7.4 Crop Ingestion - Chronic Exposures

Two models are used for calculating human exposures to contaminated foods, one for chronic releases and one for acute releases. The acute model is an extension of the chronic model and is described in Section 4.7.6.

Irrigating with contaminated water or direct deposition of airborne contaminants onto plants can contaminate agricultural crops. Four food products

associated with contaminated crop production are considered: leafy vegetables, root vegetables, grains, and fruit. The leafy vegetable category represents plants such as lettuce whose edible portions are above ground, exposed, and eaten directly with little processing. The root vegetable category represents all other vegetable crops where direct deposition has a much smaller chance of being incorporated directly into the edible portion of the plant. The model used to estimate radionuclide concentration in edible plant portions considers uptake from two pathways: direct deposition and absorption through roots from soil. The model is a variant of that prepared for the NRC for use in Regulatory Guide 1.109 (1977a). This model has been shown to be reasonable by direct comparison of modeled and measured values (Jaquish and Napier 1987). From direct deposition onto leaves, the radionuclide concentration in the plant at time of consumption is calculated as follows:

$$Cl_{ip} = Du_i \, Tv_p \, r \, [1 - \exp(-\lambda e_i \, te_p)] \exp(-\lambda_i \, th_p)/(\lambda e_i \, Y_p) \qquad (4.7.6)$$

where Cl_{ip} = concentration of radionuclide i in the vegetable for pathway p (leafy, root, grain, or fruit) from deposition onto leaves (Ci/kg)

Du_i = deposition rate from air or water onto farmlands ($Ci/m^2/sec$)

Tv_p = translocation factor from plant surfaces to edible parts of the plant (dimensionless), currently assumed at 1.0 for leafy vegetables and forage crops, and 0.1 for all other vegetation

r = fraction of initial deposition retained on the plant (dimensionless), discussed below

λe_i = effective weathering and decay constant (sec^{-1})

te_p = duration of the growing period for plant type p (sec)

th_p = time between harvest and consumption for the vegetable type (sec)

Y_p = yield of crop type p (kg/m^2).

From the root uptake pathway, radionuclide concentration in the plant is calculated as follows for air deposition pathways:

$$Cr_{ip} = [Cd_i \, R_{p2} + (Cs_i/P + Cb_i) \, R_{p1}] \, Bv_{ip} \exp(-\lambda_i \, th_p) \qquad (4.7.7)$$

where Cr_{ip} = plant concentration from uptake through roots for radionuclide I and plant type p (Ci/kg)

Bv_{ip} = soil-to-plant transfer factor for radionuclide i (dimensionless) and plant type p

Cb_i = residual soil concentration from previous years' deposition of radionuclide i (Ci/kg)

Cs_i = area soil concentration from air deposition for radionuclide i (Ci/m^2), discussed below

Cd_i = deep soil concentration for radionuclide i, Ci/kg, discussed below

P = effective soil density in the plow layer (kg/m^2)

R_{p1} = root penetration factor for surface soil, (dimensionless)

R_{p2} = root penetration factor for deep soil, (dimensionless).

This root penetration factor is included for special cases where the contamination is not uniform with soil depth. See the soil model discussion in Section 4.6. The factor allows a simple correction based on the fraction of the plant room system that is in contaminated soil. For example, if the contaminated soil is buried a meter or so below the surface, only a portion of the root system would reach the contamination. Uptake of radioactivity for such cases would likely be less than if the entire root system were in contact with the contamination.

The total plant concentration at the time of consumption is then calculated as the sum of the contributions from direct deposition and soil uptake as follows:

$$C_{ip} = Cl_{ip} + Cr_{ip} \tag{4.7.8}$$

where C_{ip} is the concentration of radionuclide i in crop type p at the time of consumption (Ci/kg).

The individual dose from ingestion of agricultural crops is estimated from the plant concentration in Equation (4.7.8) and the average consumption rate of vegetables as follows:

$$Dv_i = \sum_{p=1}^{4} U_p \, C_{ip} \, Dg_i \qquad (4.7.9)$$

where Dv_i is the dose from consumption rate of contaminated crops (rem/yr), and U_p is the consumption rate of crop type p (leafy, root, grain, or fruit) in kg/yr. The summation is over the four vegetable types.

Interception Fraction, r

The interception fraction, r, for a given vegetation type is a factor that accounts for the fact that not all of the material deposited within a unit area will end up on vegetation surfaces. The fraction of the total deposition that initially resides on vegetation is the interception fraction, r, such that $0 < r < 1.0$.

The interception of materials in irrigation water is not well studied. Thus, a default value of 0.25 is used for all materials deposited on all vegetation types by irrigation.

An empirical relationship between biomass and interception fraction was originally suggested by Chamberlain (1967). This model has been expanded recently by Pinder, Ciravolo, and Bowling (1988) for grasses and other species. The following form of the equation is used for grasses, leafy vegetables, and grains:

$$r = 1.0 - \exp(-2.9 \, Y_p \, f_d) \qquad (4.7.10a)$$

A similar equation is used for fruits and other vegetables:

$$r = 1.0 - \exp(-3.6 \, Y_p \, f_d) \qquad (4.7.10b)$$

where f_d is the dry-to-wet biomass ratio, and Y_p is the standing biomass of the growing vegetation, kg(wet)/m^2. The dry-to-wet ratio is required because the Pinder formulations are given in terms of dry biomass. This formulation results in the need to define the growing biomass, as well as the harvested yield (for use with the harvest removal term defined in Section 4.6). The values currently in the GENII default files are given in Table 4.25.

The value formerly used at Hanford for the interception fraction was 0.25 for atmospheric deposition and for irrigation deposition. The newer formulations for atmospheric deposition tend to produce higher concentrations than did previous techniques.

4.7.5 Animal Product Ingestion - Chronic Exposures

Atmospheric deposition of contaminants onto feed crops and use of contaminated water to irrigate feed crops can result in the ingestion of contaminated crops by animals. In addition, contaminated water can be used for animal drinking water. Four animal products are considered: beef, poultry, cow milk, and eggs. In evaluating the radionuclide concentration in the beef, poultry, milk, and eggs, the animals are assumed to be feed crops containing radionuclide levels defined by Equation (4.7.8), without the decay correction between harvest and consumption [the exponential term with th_p in Equations (4.7.6) and (4.7.7)]. The animal product concentration resulting from animal ingestion of contaminated feed is calculated as follows:

$$Cf_{im} = C_{ip}\ F_{mi}\ f\ Qf\ \exp(-\lambda_i\ th_m) \qquad (4.7.11)$$

where Cf_{im} = concentration of radionuclide i in animal product m, from animal ingestion of contaminated feed (Ci/L for milk and Ci/kg for meat)

C_{ip} = concentration of radionuclide i in feed crop p, used by the animal (Ci/kg)

f = fraction of animal feed that is contaminated (dimensionless)

F_{mi} = transfer coefficient that relates daily intake rate by an animal to the concentration in an edible animal product (Ci/L milk per Ci/day for milk and Ci/kg meat per Ci/day for meat)

Qf = consumption rate of feed by the animal (kg/d)

th_m = holdup time between harvest or slaughter and consumption for the animal product (sec).

TABLE 4.25. Harvested Yield, Standing Biomass, and Ratio of Dry to Wet Vegetation Used in Interception and Harvest Removal Models

Category	Harvested[a] Yield (wet) for Soil Removal	Standing[b] Biomass (wet) for Interception	Dry-to-Wet[c] Ratio for Interception
Leafy Vegetables	2.0	2.0	0.10
Other Vegetables	4.0	2.0	0.25
Grain	0.6	0.8	0.18
Fruit	2.0	3.0	0.18
Meat: Forage/Hay	2.0[d]	1.0	0.20
Meat: Grain	0.6	0.8	0.18
Poultry & Eggs: Grain	0.6	0.8	0.18
Milk: Fresh Forage	3.0[d]	1.5	0.20
Milk: Hay	2.0[d]	1.0	0.20

(a) Adapted from data in Shor, Baes, and Sharp (1982) for the Washington counties of Benton, Franklin, and Yakima.
(b) Derived from data in Shor, Baes, and Sharp (1982), Strenge, Bander, and Soldat (1987), or Napier et al. (1980).
(c) Adapted from Till and Meyer (1983), Section 5.
(d) Multiple cuttings.

In evaluating the feed concentration, C_{ip}, from Equation (4.7.8), parameters representative of animal feed production are used which differ from vegetable production parameters for human consumption. For example, the growing period is usually set to 30 days to represent animal grazing habits.

The contribution to animal product concentration from animal ingestion of contaminated water is calculated as follows:

$$Cw_{im} = Cw_i \; F_{mi} \; fw \; Qw \; \exp(-\lambda_i \; th_m) \qquad (4.7.12)$$

where Cw_{im} = concentration of radionuclide i in an animal product m, from animal ingestion of water (Ci/kg for meat and Ci/L for milk)

fw = fraction of animal water that is contaminated (dimensionless)

Qw = consumption rate of water by the animal (L/d).

Default values of the animal consumption rates used in the GENII code are given in Table 4.26.

The total concentration in the animal product is the sum of the contributions from feed and water intake:

$$C_{im} = Cw_{im} + Cf_{im} \tag{4.7.13}$$

where C_{im} is the concentration of radionuclide i in animal product m (Ci/kg) for beef and eggs, and Ci/L for milk).

The individual dose is calculated from the animal product concentration and the consumption rate of the products as follows:

$$D_{mi} = \sum_{m=1}^{4} U_m C_{im} Dg_i \tag{4.7.14}$$

where D_{mi} is the individual dose for radionuclide i from ingestion of animal product m (rem), and U_m is the average daily consumption rate of animal product m (L/d for milk and kg/d for meat). The summation is over the four animal product types - meat, milk, poultry, and eggs.

TABLE 4.26. Default Consumption Rates of Feed and Water by Farm Animals

Animal	Feed or Forage (kg/day)	Water (L/day)
Milk Cow	55	60
Beef Cattle	68	50
Poultry	0.12 (dry feed)	0.3

Adapted from Baker, Hoenes, and Soldat (1976).

4.7.6 Terrestrial Food Pathways Models - Acute Releases

Radionuclides deposited on farmland can result in human radiation exposure through farm product pathways. These pathways include food crops

and animal products. Under accidental release conditions, the amount of activity ingested through these pathways is difficult to assess. The annual average parameter values and equilibrium bioaccumulation factors used in the chronic pathway analysis models are not directly applicable in describing radionuclide behavior during the short time periods considered in accidental release situations, but they may be more useful for estimating time-integrated dose. The GENII formulation for acute releases takes advantage of this. Information is not provided on dose rates, but estimates are given for total integrated dose for specific sets of assumptions. The GENII formulation is similar to, but an extension of, that used in the Belgian model DOSDIM (Govaerts, Martens, and Kretzchmer 1983). The GENII formulation is also conceptually similar to that used in the model PATHWAY (Whicker and Kirchner 1987), but it uses fewer input parameters.

The GENII formulation for acute releases is intended to be used in prospective assessments, for which the exact timing and conditions of an accident cannot be predicted. For conditions following an accident, the GENII models using known input concentrations should instead be used.

The basic input to the following derivation is season of year, which is actually a surrogate for a more complex set of assumptions concerning crop status and time until harvest. In brief:

- Winter accidents result in soil contamination which becomes a source of contamination via root uptake for all plant pathways for the remainder of the year.
- Spring accidents result in soil contamination for root vegetables, grains, and fruit (because of little plant development and long weathering times). They also result in deposition on leafy vegetables and pasture grass (thus causing milk and beef contamination). Human exposures to ingested contaminants via the leafy vegetable and milk pathways are moderated by the weathering of the initial contamination, using the model developed for the PABLM code by Napier (Till and Meyer 1983). A weathering time of up to three months is assumed.

- Summer accidents result in both soil and leaf contamination of all vegetable products and of forage for animals. A weathering time of one month is assumed for root vegetables, grains, and fruit; immediate harvest and use are assumed for leafy vegetables and forage using the PABLM continuous weathering model.
- Autumn accidents are assumed to occur immediately before harvest, resulting in no soil uptake for crops for that year.

The initiating parameter in all of the following equations is the initial deposition on the ground and plant surfaces. This may be defined from the integrated air concentration or the integrated water concentration as

$$Cs(t=0)_a = E/Q\ Q\ V_d \tag{4.7.15}$$

$$Cs(t=0)_w = E_w\ I \tag{4.7.16}$$

where $Cs(t=0)_a$ = the initial soil surface concentration (i.e., at time t=0) from atmospheric deposition, also interpreted as the total downward flux of material per unit area (Ci/m^2)

$Cs(t=0)_w$ = the initial soil surface concentration from irrigation deposition (Ci/m^2)

and other terms are as defined in prior sections.

The basic formulation for human intake of contaminated crops is dependent on the times of deposition, harvest, and consumption. The initial concentration on the plant can be expressed as

$$C_p(t=0) = r\ C_s(t=0)\ Tv_p/Y \tag{4.7.17}$$

The initial plant concentration due to the initial deposition decreases over time by means of radiological decay and weathering. These processes are assumed to occur continuously from deposition to harvest. The plant concentration at harvest is calculated as

$$C_p(t=T_h) = C_p(t=0)\ e^{-\lambda e\ Th} \tag{4.7.18}$$

where λe = an effective removal constant

$\lambda e = \lambda r + \lambda w$

λr = radiological decay constant

λw = weathering removal rate, based on a half time of 14 days.

After harvest, a delay period usually occurs before consumption of the food product begins. During this delay, additional radiological decay may occur. For some crops, the consumption period may last for weeks or months. To estimate the uptake during this period, consumption is assumed to occur at a uniform rate. The total intake is then given by a time integral over the consumption period

$$I = \int_0^{T_f} C_p(t=T_h)\ e^{-\lambda r t}\ U\ dt \qquad (4.7.19a)$$

or

$$I = U\ C_p(t=T_h)\ [1 - e^{-\lambda r\ T_f}]/\lambda r \qquad (4.7.19b)$$

where I = the total activity of a radionuclide ingested over a consumption period Tf (Ci)

U = the average daily ingestion rate of the crop over the ingestion period (kg/day)

T_f = the length of the uptake period (day).

The radiation dose received by a person ingesting this amount of activity can be determined using appropriate ingestion dose conversion factors.

This model may be extended for use with animal products. The animal is assumed to eat contaminated crops or drink contaminated water and produce contaminated products continuously over the consumption period defined for humans. The animal product concentration at the time of production is then given as

$$C_a(t) = C_p(t)\ F_{mi}\ f\ Qf \qquad (4.7.20)$$

This animal concentration is not strictly appropriate, because the equilibrium constant does not directly apply to the transient case; but the integral

of the concentration is appropriate. The result for the animal product concentration is then used in Equation (4.7.19b) to estimate the total radionuclide intake by an individual consuming the particular animal product. This model is most appropriate for animal products in which the radionuclide concentration comes to a rapid equilibrium.

Application of the general equations is illustrated in Tables 4.27 through 4.30. These tables present the equations used for leafy vegetables, other vegetables, milk and meat, and other animal products for the four seasons. The equations yield the total time-integrated concentration realized by the consumer of the food product, in Ci-yr/kg, which when multiplied by the consumption rate in kg/yr gives in Ci the total intake of radionuclides resulting from the initial release.

For each of the equations in Tables 4.27 through 4.30, terms are included for uptake to the crop by means of root and leaf pathways. For winter and some spring pathways, the leaf route is set to zero. The plant is assumed dead above ground during winter. For autumn accidents, the root pathways are set to zero because the harvest is assumed to occur soon enough after the deposition that the plant has not come to an equilibrium with the soil. Most equations also explicitly contain the exponential term of Equation (4.7.19b). Those that do not, contain the term $[1/(\lambda r + \lambda w)]$. This is the exponential integrated to infinity, because the weathering term is so fast that the remainder of the integral term is negligible.

4.7.7 External Exposure

Land and surface-water transport pathways are involved in external radiation exposure. Individuals may be exposed to contaminated air and ground. They may also be exposed through aquatic recreational activities, such as boating, swimming, and shoreline water use. The radiation dose is calculated as follows from the water concentration or soil concentration, depending on which transport pathway is being studied.

TABLE 4.27. Acute Concentration Equations for Leafy Vegetables

WINTER

$$\left[C_{OA}\, e^{-\lambda_r 6mo} \frac{B_{vi}}{p} RF1 \quad + \quad 0.0 \right] e^{-\lambda_r t_h} \left(\frac{1 - e^{-\lambda_r 12mo}}{\lambda_r} \right) \quad \frac{Ci\text{-}yr}{kg}$$

SPRING

$$\left[(C_{OA} + C_{OW}) \frac{B_{vi}}{p} RF1 \left(\frac{1 - e^{-\lambda_r 12mo}}{\lambda_r} \right) + (C_{OA} I_A + C_{OW} I_W) \frac{T}{Y} \left(\frac{1 - e^{-(\lambda_r + \lambda_W) 12mo}}{\lambda_r + \lambda_W} \right) \right] e^{-\lambda_r t_h} \quad \frac{Ci\text{-}yr}{kg}$$

SUMMER

$$\left[(C_{OA} + C_{OW}) \frac{B_{vi}}{p} RF1 \left(\frac{1 - e^{-\lambda_r 12mo}}{\lambda_r} \right) + (C_{OA} I_A + C_{OW} I_W) \frac{T}{Y} \left(\frac{1 - e^{-(\lambda_r + \lambda_W) 12mo}}{\lambda_r + \lambda_W} \right) \right] e^{-\lambda_r t_h} \quad \frac{Ci\text{-}yr}{kg}$$

FALL

$$\left[0.0 \quad + (C_{OA} I_A + C_{OW} I_W) \frac{T}{Y} \left(\frac{1 - e^{-\lambda_r 12mo}}{\lambda_r} \right) \right] e^{-\lambda_r t_h} \quad \frac{Ci\text{-}yr}{kg}$$

TABLE 4.28. Acute Concentration Equations for Other Vegetables

	Root Term	Leaf Term	Holdup	Consumption Integral	
WINTER	$\left[(C_{OA} \quad e^{-\lambda_r 6mo}) \frac{B_{vi}}{P} RF1 + \right.$	0.0	$\left. \right] e^{-\lambda_r t_h}$	$\left(\frac{1-e^{-\lambda_r 12mo}}{\lambda_r} \right)$	$\frac{Ci\text{-}yr}{kg}$
SPRING	$\left[(C_{OA} + C_{OW}) e^{-\lambda_r 3mo} \frac{B_{vi}}{P} RF1 + \right.$	0.0	$\left. \right] e^{-\lambda_r t_h}$	$\left(\frac{1-e^{-\lambda_r 12mo}}{\lambda_r} \right)$	$\frac{Ci\text{-}yr}{kg}$
SUMMER	$\left[(C_{OA} + C_{OW}) e^{-\lambda_r 1mo} \frac{B_{vi}}{P} RF1 + \right.$	$\left. (C_{OA} I_A + C_{OW} I_W) \frac{T}{Y} e^{-(\lambda_r + \lambda_W) 1mo} \right]$	$e^{-\lambda_r t_h}$	$\left(\frac{1-e^{-\lambda_r 12mo}}{\lambda_r} \right)$	$\frac{Ci\text{-}yr}{kg}$
FALL	$\left[\quad 0.0 \quad \right.$	$\left. + (C_{OA} I_A + C_{OW} I_W) \frac{T}{Y} \right]$	$e^{-\lambda_r t_h}$	$\left(\frac{1-e^{-\lambda_r 12mo}}{\lambda_r} \right)$	$\frac{Ci\text{-}yr}{kg}$

TABLE 4.29. Acute Deposition Integrated Concentration Equations for Milk and Beef

WINTER

Forage Equation:

Root Leaf

$$((C_{OA}e^{-\lambda_r 6mo}\frac{BVi}{p}RF1)\ FR + 0.0 = A$$

Stored Feed:

Root Leaf

$$((C_{OA}e^{-\lambda_r 6mo}\frac{BVi}{p}RF1)\ (1-FR) + 0.0 = B$$

Water:

$$Q_w\ E_w\ T_f = C$$

Final Equation:

$$\left\{(A + B)\left(\frac{1-e^{-\lambda_r 12mo}}{\lambda_r}\right) Qf + C\right\} F_{mi}e^{-\lambda_r th}$$

SPRING

Forage Equation:

Root Leaf

$$\left[(C_{OA}+ C_{OW})\frac{BVi}{p}RF1\left(\frac{1-e^{-\lambda_r 12mo}}{\lambda_r}\right) + (C_{OA}I_A+ C_{OW}I_W)\frac{T}{Y}\left(\frac{1-e^{-(\lambda_r+\lambda_w)12mo}}{(\lambda_r + \lambda_w)}\right)\right] FR = A$$

Stored Feed:

Root Leaf

$$\left[(C_{OA}+ C_{OW})\ e^{-\lambda_r 3mo}\frac{BVi}{p}RF1 + 0.0\right] (1-FR)\left(\frac{1-e^{-\lambda_r 12mo}}{\lambda_r}\right) = B$$

Water:

$$Q_w\ E_w\ T_f = C$$

Final Equation:

$$\left\{(A + B)\ Qf + C\right\} F_{mi}e^{-\lambda_r th}$$

TABLE 4.29. (contd)

SUMMER

Forage Equation:

Root — Leaf

$$\left[(C_{OA} + C_{OW})\ \frac{BVi}{\rho}\ RF1 \left(\frac{1-e^{-\lambda_r 12mo}}{\lambda_r}\right) + (C_{OA}I_A + C_{OW}I_W)\ \frac{T}{Y} \left(\frac{1-e^{-(\lambda_r+\lambda_w)12mo}}{(\lambda_r + \lambda_w)}\right)\right] FR = A$$

Stored Feed:

Root — Leaf

$$\left[(C_{OA} + C_{OW})\ e^{-\lambda_r 1mo}\ \frac{BVi}{\rho}\ RF1 + (C_{OA}I_A + C_{OW}I_W)\ \frac{T}{Y}\ e^{-(\lambda_r+\lambda_w)1mo} \left(\frac{1-e^{-\lambda_r 12mo}}{\lambda_r}\right) (1-FR)\right] = B$$

Water:

$$Q_w\ E_w\ T_f = C$$

Final Equation:

$$\left\{(A + B)\ Qf + C\right\} F_{mi} e^{-\lambda_r th}$$

FALL

Forage Equation:

Root — Leaf

$$\left[0.0 + (C_{OA}I_A + C_{OW}I_W)\ \frac{T}{Y} \left(\frac{1-e^{-\lambda_r 12mo}}{\lambda_r}\right)\right] FR = A$$

Stored Feed Equation:

$$\left[0.0 + (C_{OA}I_A + C_{OW}I_W)\ \frac{T}{Y} \left(\frac{1-e^{-\lambda_r 12mo}}{\lambda_r}\right)\right] (1-FR) = B$$

Water:

$$Q_w\ E_w\ T_f = C$$

Final Equation:

$$\left\{(A + B)\ Qf + C\right\} F_{mi} e^{-\lambda_r th}$$

TABLE 4.30. Acute Deposition Integrated Concentration Equations for Other Animals

	Grain Roots	Grain Leaves	Consumption Integral	Water Term	Holdup
WINTER	$\left\{\left[(C_{OA}\right.\right.$	$)e^{-\lambda_r 6mo}\frac{B_{vi}}{P}RF1 +$	0.0	$\left.\right]Q_f\left(\frac{1-e^{-\lambda_r 12mo}}{\lambda_r}\right)$	$+ Q_w E_w T_f \left.\right\}F_{MI}e^{-\lambda_r th}$
SPRING	$\left\{\left[(C_{OA} + C_{OW})\right.\right.$	$e^{-\lambda_r 3mo}\frac{B_{vi}}{P}RF1 +$	0.0	$\left.\right]Q_f\left(\frac{1-e^{-\lambda_r 12mo}}{\lambda_r}\right)$	$+ Q_w E_w T_f PA \left.\right\}F_{MI}e^{-\lambda_r th}$
SUMMER	$\left\{\left[(C_{OA} + C_{OW})\right.\right.$	$e^{-\lambda_r 1mo}\frac{B_{vi}}{P}RF1 + (C_{OA} I_A + C_{OW} I_W)\frac{T}{Y} e^{-(\lambda_r+\lambda w)1mo}$		$\left.\right]Q_f\left(\frac{1-e^{-\lambda_r 12mo}}{\lambda_r}\right)$	$+ Q_w E_w T_f \left.\right\}F_{MI} e^{-\lambda_r th}$
FALL	$\left\{\left[\right.\right.$	$0.0 + (C_{OA} I_A + C_{OW} I_W)\frac{T}{Y}$		$\left.\right]Q_f\left(\frac{1-e^{-\lambda_r 12mo}}{\lambda_r}\right)$	$+ Q_w E_w T_f \left.\right\}F_{MI} e^{-\lambda_r th}$

Aquatic Recreational Activities

For water pathways, the recreational dose is

$$De_i = (0.5\ tb + ts)\ Cw_i\ Db_i + tf\ Cd_i\ W\ Ds_i \qquad (4.7.21)$$

where De_i = dose to an individual from external exposure for radionuclide i, from aquatic recreational activities (rem)

Cd_i = sediment concentration of radionuclide i, deposited on shoreline from contaminated water (Ci/m^2)

tb = time spent by an individual in boating (h)

tf = time spent by an individual fishing or in shoreline activities (h)

ts = time spent by an individual swimming (h)

Db_i = external dose conversion factor for radionuclide i, for immersion in water (rem/h per Ci/L)

Ds_i = external dose conversion factor for exposure to a contaminated plane of radionuclide i (rem/h per Ci/m^2)

W = shore width factor to correct for finite size of shoreline (dimensionless).

The average sediment concentration is estimated from a model developed by Soldat, Robinson, and Baker (1974) relating water concentration to sediment concentration following a long period of deposition. The sediment concentration is given by the following expression:

$$Cd_i = 100\ T_i\ C_{wi}\ \ [1 - \exp(-\lambda_i\ T_b)] \qquad (4.7.22a)$$

where T_b = length of time the sediment is exposed to the contaminated water (d)

T_i = physical half-life of the radionuclide (d)

100 = transfer constant from water to sediment ($L/m^2/d$).

The value of the transfer constant was derived for several radionuclides by using data obtained from analyzing water and sediment samples taken from the Columbia River between Richland, Washington, and the river mouth, and from Tillamook Bay, Oregon, 75 km south of the river mouth (Nelson 1965;

Toombs and Cutler 1968). The equation estimates an effective surface contamination for calculating gamma exposure rates to persons standing on sediment.

The shore-width factor, W, represents the fraction of dose from an infinite plane source an individual could receive from a given shoreline situation that may not be well described as an infinite plane (for which the dose factors are defined). The shore-width factor is essentially a geometric correction. Suggested values for W are derived from experimental data (Dunster 1971) and are presented in Table 4.31.

TABLE 4.31. Suggested Values for Shore-Width Factor

Shoreline Type	Shore-Width Factor
River Shoreline	0.2
Lake Shore	0.3
Nominal Ocean Site	0.5
Tidal Basin	1.0

For acute releases, the time-integrated water concentration, E_W, is used in place of the integral portion of Equation (4.7.22a) as

$$C_{di} = 100\ T_i\ E_W \qquad (4.7.22b)$$

Exposures from sediment are then calculated as given in Equation (4.7.21). For swimming and boating, certain assumptions have been incorporated. It is assumed that maximum individuals are exposed to the entire passage of the contaminated water. Populations, conversely, are assumed to completely avoid contamination. These assumptions are only valid if the acute release and transport times are short. Otherwise, the individual dose could be substantially over estimated. With these assumptions, Equation (4.7.21) can be rewritten as

$$De_i = 1.5\ Ew_i\ Db_i + tf\ Cd_i\ W\ Ds_i \qquad (4.7.23)$$

Contaminated Land

Generally, exposure to contaminated ground is important only for the air transport pathway because water transport pathways will not result in widespread contamination. Airborne deposition is assumed to cover the entire region of the defined population group, and all individuals are potentially exposed. However, in evaluating the maximally exposed individual dose, soil contamination from irrigation is also included as an external exposure route. The radiation dose is calculated from the soil concentration as follows:

$$Dx_i = ts\ Cs_i\ Ds_i \tag{4.7.24}$$

where Dx_i is dose to an individual from exposure to contaminated ground for radionuclide i (rem), and ts is the time of exposure to contaminated ground (h).

Inadvertent Ingestion of Soil and Water

Uptake of radionuclides may result from inadvertent ingestion of soil with foods or of water during recreational swimming. Soil ingestion is estimated conservatively using soil ingestion amounts of Kimbrough et al. (1983) presented in Table 4.32. Using the values in this table, an estimate of average soil ingestion over the lifetime of an individual can be obtained. This average value is 410 mg/d. The average individual dose from inadvertent ingestion of soil is then estimated as follows:

TABLE 4.32. Soil Ingestion by Age[a]

Age Group	Soil Ingested (mg/d)
0 - 9 mo	0
9 - 18 mo	1,000
1.5-3.5 yr	10,000
3.5-5 yr	1,000
> 5 yr	100

(a) Derived from Kimbrough et al. (1983).

$$Dd_i = 410\ td\ Cs_i\ Dg_i / 2.24 \cdot 10^8 \qquad (4.7.25)$$

where Dd_i = dose to an individual from inadvertent ingestion of soil (rem)
td = period of exposure to ingestion of soil (d)
410 = daily average soil ingestion rate (mg soil/d)
$2.24 \cdot 10^8$ = areal soil density (mg soil/m^2).

Inadvertent ingestion of water may also occur during recreational swimming. The amount ingested is assumed to be 10 mL per hour of swimming. The time of swimming (ts) as defined above for Equation (4.7.21) is used to estimate the average daily exposure as follows:

$$Dr_i = 0.01\ Cw_i\ ts\ Dg_i \qquad (4.7.26)$$

where Dr_i is the dose to an individual from ingestion of water during recreational swimming (rem), and 0.01 is the inadvertent water ingestion rate during recreational swimming (L/hr).

4.7.8 Population Dose Calculations

The above models have described calculation of dose to individuals. Population doses can be estimated from the individual dose in two ways, depending on the basis for determining the exposure of the population group. If the number of people exposed by a given pathway is known, then the population dose for that pathway is estimated as the product of individual dose and population exposed as

$$D_{pi} = P_p\ D_{pi} \qquad (4.7.27)$$

where P_{pi} = population dose for pathway p and radionuclide i (person-rem)
D_{pi} = dose to an individual from pathway p and radionuclide i (rem)
P_p = number of people exposed by pathway p (persons).

External exposure pathways and inhalation exposure use Equation (4.7.27). The ingestion pathway may also use Equation (4.7.27) if the amount of food produced is known to be sufficient to feed the given population. Or alternatively, base the number of people exposed on the amount of

food produced. This is accomplished by considering the number of people that can be fed by the production using average ingestion rates.

$$P_p = K_p/(U_p\ t_p) \tag{4.7.28}$$

where P_p = population served by production of food type p (persons)

K_p = production of food type p during period of exposure (kg or L)

U_p = consumption rate of food type p during the period of exposure (kg/d or Ld)

t_p = period of exposure (d).

The population served as calculated by Equation (4.2.28) is then used in Equation (4.7.27) to estimate the population dose.

4.7.9 Special Models for ^3H and ^{14}C

The behavior of the radionuclides tritium and carbon-14 in exposure pathways is handled in a special manner. The concentrations of tritium or carbon-14 in environmental media (soil, plants, and animal products) are assumed to have the same specific activity (curies of radionuclide per kilogram of soluble element) as the contaminating medium (air or water). The fractional content of hydrogen or carbon in a plant or animal product is then used to compute the concentration of tritium or carbon-14 in the food product under consideration. The hydrogen content in both the water and the nonwater (dry) portion of the food product are used when calculating the tritium concentration. For airborne releases, it is assumed that plants obtain all their carbon from airborne carbon dioxide and that animals obtain all their carbon through ingestion of plants.

The transfer of ^{14}C from water to plants is difficult to model because plants acquire most of their carbon from the air. Currently available models for carbon-14 uptake by plants from water use specific-activity models relating the activity in the plants directly to the activity in irrigation water. This is extremely conservative in that it assumes that plants receive all of their carbon from water. An interim model is described here based on the ratio of grams of carbon-14 to grams of total carbon in soil and a correction for the amount of carbon plants obtain from soil.

The special models recommended for ^3H are described first followed by the ^{14}C models. The concentration of tritium in vegetation is calculated as

$$C_{Hp} = 9\ C_{wH}\ F_{Hp} \tag{4.7.29}$$

where C_{Hp} = the concentration of ^3H in plant type p (Ci/kg)
C_{wH} = the concentration of tritium in the environmental water (Ci/L)
F_{Hp} = the fraction of hydrogen in total vegetation.

The coefficient 9 converts tritium concentration in environmental water to concentration in hydrogen. The fractions of hydrogen in various food types are given in Table 4.33.

For airborne release, the concentration of ^3H in environmental water is calculated from the air concentration and the absolute humidity as follows:

$$C_{wH} = C_{aH}/H \tag{4.7.30}$$

where C_{aH} is the average air concentration of ^3H (Ci/m^3), and H is the absolute humidity (L/m^3), taken to be 0.008 L/m^3 for Hanford.

The concentration of tritium in the animal product is

$$C_{Hm} = \frac{C_{Hp}Qf + C_{wH}Qw}{F_{Hf}Qf + Qw/9}\ F_{Hm} \tag{4.7.31}$$

where C_{Hm} = concentration of ^3H in animal product m (Ci/kg or Ci/L)
C_{Hp} = concentration of ^3H in animal product feed crop p (Ci/kg)
C_{wH} = concentration of ^3H in animal drinking water (Ci/L)
F_{Hf} = fraction of hydrogen in animal feed (dimensionless)
F_{Hm} = fraction of hydrogen in animal product m (dimensionless)
and other terms are as previously defined.

The models for ^{14}C are similar to those for ^3H. The concentration of carbon-14 in vegetation from irrigation is

TABLE 4.33. Fractions of Hydrogen and Carbon in Environmental Media, Vegetation, and Animal Products

Food or Fodder	Water f_w	Carbon (dry) f_c	Hydrogen (dry) f_h	Carbon[a] (wet) F_{cv}, F_{ca}	Hydrogen[b] (wet) F_{hv}, F_{na}
Fresh fruits, vegetables, and grass	0.80	0.45	0.062	0.090	0.10
Grain and stored animal feed	0.12	0.45	0.062	0.40	0.068
Eggs	0.75	0.60	0.092	0.15	0.11
Milk	0.88	0.58	0.083	0.070	0.11
Beef	0.60	0.60	0.094	0.24	0.10
Poultry	0.70	0.67	0.087	0.20	0.10

Absolute humidity . . . . . 0.008 L/m^3

Concentration of carbon in water . . . . . 2.0×10^{-5} kg/L[c]

Concentration of carbon in air . . . . . 1.6×10^{-4} kg/m^3[d]

Fraction of soil which is carbon 0.03

Soil moisture . . . . . 0.1 L/kg

(a) F_{cv} or $F_{ca} = f_c\ (1 - f_w)$

(b) F_{hv} or $F_{ha} = f_w/9 + f_h\ (1 - f_w)$

(c) Assumes a typical bicarbonate concentration of 100 mg/L

(d) Assumes a typical atmospheric CO_2 concentration of 320 ppm_v

$$C_{Cp} = C_{wC}\ I\ te_p \frac{0.1}{0.01\ P\lambda s_C} [1 - \exp(-\lambda s_C\ te_p)] \qquad (4.7.32)$$

where C_{Cp} = concentration of ^{14}C in plant type p (Ci/kg)
C_{wC} = concentration of ^{14}C in irrigation water
λs_C = effective removal rate constant for 13C in soil (sec -1)
0.1 = the assumed uptake of 10% of plant carbon from soil
0.01 = the average fraction of soil that is carbon

and other terms are as previously defined. The concentration of ^{14}C in crops from atmospheric contamination is calculated as

$$C_{Cp} = C_{aC}\ F_{Cp}/P_C \qquad (4.7.33)$$

where C_{aC} = concentration of ^{14}C in air (Ci/m^3)
F_{Cp} = fraction of carbon in the plant (dimensionless)
P_C = concentration of carbon in air (kg/m^3).

The concentration of ^{14}C in animal products is calculated as

$$C_{Cm} = \frac{C_{Cp}Q_f + C_{wC}Q_w}{F_{Cf}Q_f + F_{Cw}Q_w} F_{Cm} \qquad (4.7.34)$$

where C_{Cm} = concentration of ^{14}C in animal product p (Ci/kg or Ci/L)
C_{Cp} = concentration of ^{14}C in crop used for animal feed (Ci/kg)
C_{wC} = concentration of ^{14}C in animal drinking water (Ci/L)
F_{Cf} = fraction of carbon in animal feed (dimensionless)
F_{Cw} = fraction of carbon in animal drinking water (dimensionless)
F_{Cm} = fraction of carbon in animal product m (dimensionless)

and other terms are as previously defined. This expression can be simplified for airborne releases by noting that the water concentration (C_{wC}) is zero, and the carbon content in plants is much higher than in water ($F_{Cf} \gg F_{Cw}$). The animal product concentration then becomes:

$$C_{Cm} = C_{Cp} \frac{F_{Cm}}{F_{Cf}} \qquad (4.7.35)$$

4.8 LONG-TERM CALCULATIONS

This section describes the mathematical models and algorithms used in the DITTY program. The discussion is divided into five parts as follows:

- source terms - specification and use
- airborne release - modes for estimating average air concentrations downwind of the release, and definition of the exposed population
- waterborne release - model for definition of exposed populations
- environmental concentrations - models to estimate important environmental pathway concentrations
- pathway dose calculations - models to determine total population doses from important pathways.

Most of the descriptions parallel those in the previous five sections, 4.3 to 4.7, modified for the 10,000-year integral formulation.

4.8.1 Incorporation of Long-Term Sources

The environmental source terms represent the rate at which radionuclides enter the environment through airborne or waterborne routes. The generation of source terms is normally performed by sophisticated computer programs for ground water transport. To interface easily with these programs, a general method for source-term specification was chosen: all radionuclide release-rate data are provided as time/rate data pairs. Each data pair gives a time (years after a reference time) and a release rate in curies per year for a given radionuclide. The data for each radionuclide are provided in a set of data pairs with up to 450 time points. Such a set is provided for each radionuclide of interest. Using this procedure, a different set of time points can be used for each radionuclide. Because of the great variation in transport properties among the radionuclides of interest in radioactive waste, it is important to be able to specify releases over a range of time periods.

To use the release rate data within the 70-year increment calculational scheme, the release rate data are interpolated and integrated to give the total activity released in each 70-year increment.

A special option is included to describe an acute release to the environment at the beginning of the time period. This acute release can be selected for either airborne or waterborne pathways. No more than one acute release per computer simulation is allowed.

4.8.2 Long-Term Airborne Releases

To estimate the radiation dose received from releases to the atmosphere, it is necessary to consider atmospheric transport of radionuclides. The atmospheric processes transport the radionuclides throughout the region surrounding the release point. The resulting distribution of material is important in determining the radiation exposure received by members of the regional population through potential exposure pathways. This section describes the methods available for specifying and estimating atmospheric dispersion.

Calculating population exposure is based on a spatial grid as described in Section 4.4.3. The population data set is specified as the number of people living within each area element of the grid at a given time. Sixteen directions and up to 10 distance intervals are used. The atmospheric dispersion calculation is based on joint frequency of occurrence data for wind speed, wind direction, and atmospheric stability for the site. One set of joint frequency data is given to be used with all population data. The downwind normalized air concentration is estimated for each area element using the long-term average equation provided in Section 4.3. If values of normalized air concentrations are already known, they may be supplied as input rather than calculations. The dispersion factors are used with the population distribution data to provide a population-weighted dispersion factor. The factor represents a population-weighted estimate of the average normalized air concentration for the region. The factor is calculated as follows:

$$PM(t) = \sum_{i=1}^{\text{directions}} \sum_{j=1}^{\text{distances}} P_{ij}(t) \; (\bar{\chi}/Q')_{ij} \qquad (4.8.1)$$

where PM(t) is the population-exposure factor at time t (person-sec/m^3), and $P_{ij}(t)$ is the number of people living in the area interval in direction j at distance i at time t (persons). As the equation indicates, the population exposure factor is a function of time. Changes in population over the 10,000-year period will be the primary cause of change in the population-exposure factor. While climate changes may also affect the factor, such changes are difficult to predict and are not considered.

Two options that determine population-exposure factors are available in DITTY for normalized air concentration values. When estimates of the total population change are known, the population exposure factor for the initial time may be calculated, and values for remaining time increments will then be calculated by ratio to population changes with time. If population distribution data are known as a function of time, they may be used to calculate population-exposure factors at each of the specified times, which are, in turn, interpolated for each 70-year increment.

Specifying population exposure factors can occur by direct input of factor at defined time points or by calculation from defined meteorological data and population data. When population exposure values are input, interpolations are made to determine the values at the midpoint of each 70-year time increment.

4.8.3 Long-Term Waterborne Releases

Pathways associated with waterborne releases include external exposure to contaminated water and sediment; ingestion exposure from drinking water, farm products (via irrigation), and aquatic foods; and inhalation of resuspended material after irrigation. The release of activity to water is described by a release rate in curies per year defined at specific times. The activity released is assumed to result in exposure of a regional population. Specification of the number of people exposed to waterborne pathways is performed similarly to definition of population for airborne pathways. The major difference is that only the total population is specified (spatial distribution is not needed).

Two methods are available for defining population data for waterborne release. The first method is to define the population exposed during each of

the 143 70-year periods. The second method is to give the population present at specified times for interpolation at the midpoint of each 70-year period.

4.8.4 Long-Term Environmental Concentrations

In estimating exposure of the regional population from airborne as well as waterborne releases, it is necessary to determine radionuclide concentrations in several environmental media and exposure-pathway media. This section describes models used to estimate air, water, soil, sediment, and food concentrations for the important pathways. All radionuclide concentrations are expressed as time integrals over a 70-year period. This is done to facilitate dose calculations that use the concentration data.

Input to the pathway analysis is the total release of curies in each 70-year time period. The total release is combined with population and dispersion parameters to estimate an environmental parameter for the exposure analysis. For airborne releases, the value is calculated as:

$$A_c(i,t) = PM(t) \frac{3.16 \cdot 10^{-8}}{\lambda_{ri}} \int_{t_o}^{t_o+70} a_i(t)dt \qquad (4.8.2)$$

where $A_c(i,t)$ = population-weighted airborne release for radionuclide i over 70 years (person-Ci-yr^2/m^3)

$PM(t)$ = population exposure factor for time period t (person-sec/m^3)

λ_{ri} = radiological decay constant for radionuclide i (yr^{-1})

$a_i(t)$ = release rate of radionuclide i at time t (Ci/yr)

$3.169 \cdot 10^{-8}$ = conversion factor (yr/sec).

For waterborne releases, the water concentration parameter is calculated as:

$$W_c(i,t) = \frac{P(t)\ N\ M\ 1.119 \cdot 10^{-9}}{F_r\ \lambda_{ri}} \int_{t_o}^{t_o+70} C(t)dt \qquad (4.8.3)$$

where $W_c(i,t)$ = population-weighted water concentration for radionuclide i and time period t (person-Ci-yr^2/L)

$P(t)$ = population exposed to water for time period t (persons)

N = reconcentration factor (dimensionless)

M = mixing ratio (dimensionless)

F_r = flow rate of receiving water (ft^3/sec)

$C(t)$ = release rate to the receiving water (Ci/yr, at time t)

$1.119 \cdot 10^{-9}$ = conversion factor, $\frac{1}{28.31 \frac{L}{ft^3}\ 3.156 \cdot 10^7\ yr\ \frac{sec}{yr}} \left(\frac{ft^3\ yr}{L\ sec}\right)$.

The airborne pathway analysis used the air concentration parameter, $A_c(i,t)$, to determine several environmental concentrations:

- $S_{ca}(i,t)$, soil concentration parameter for radionuclide i, person-Ci-yr^2/kg
- $L_{ca}(i,p,t)$, time integral of leaf concentration for radionuclide i and pathway p, from air deposition and resuspension over the current period t, person-Ci-yr^2/kg
- $P_{ca}(i,p,t)$, time integral of plant concentration for radionuclide i and pathway p, from air-deposited contaminants on plants and root uptake over the current period t, person-Ci-yr^2/kg.

The soil concentration parameter is calculated from the air concentration parameter assuming deposition to be at a uniform rate over the 70-year period:

$$S_{ca}(i,t) = \frac{A_c(i,t)\ V_{di}}{7.069 \cdot 10^9} \left(\frac{1-e^{-\lambda_b t}}{\lambda_b}\right) \tag{4.8.4}$$

where V_{di} = deposition velocity for radionuclide i (m/sec)

λ_b = environmental decay constant (yr^{-1})

$7.069 \cdot 10^9$ = constant ($224\ kg/m^2 \cdot 3.156 \cdot 10^7$ sec/yr).

The environmental decay constant, λ_b, is calculated as the sum of a radiological decay constant, λ_{ri}, and a soil removal constant for weathering λ_{wi}. The soil removal constant is a correction for long-term leaching of deposited radionuclides out of the soil rooting and resuspension zones. The values given for λ_{wi} are calculated using the formula of Baes and Sharp (1981) as given in Equation (4.6.3).

The time integral of leaf concentration is calculated from the air and soil concentration parameters assuming a constant soil concentration equal to the value at the end of the 70-year period. This is a conservative assumption. The equation is:

$$L_{ca}(i,p,t) = \frac{r\,V_{di}}{Y_p}\,[A_c(i,t) + 1.49 \cdot 10^{-8}\,S_{ca}(i,t)] \qquad (4.8.5)$$

$$\left(\frac{1 - e^{-\lambda_{ei} T_p / 365}}{\lambda_{ei}}\right) 3.156 \cdot 10^7$$

where Y_p = crop yield for food pathway p (kg/m^2)

λ_{ei} = effective retention rate constant for radionuclide i (yr^{-1})

r = interception fraction, discussed in Section 4.7.4

$\lambda_{ei} = \lambda_{ri} + 18.0838$ (yr^{-1})

18.0838 = rate constant for a 14-day half time

T_p = growing period for food pathway, p (days)

0.25 = interception fraction (dimensionless)

$1.49 \cdot 10^{-8}$ = conversion factor, $1 \cdot 10^{-9}$ (m^{-1}) $\cdot$ 224/15 (kg/m^2)

365 = days per year

$3.156 \cdot 10^7$ = seconds per year.

The factor of $1 \cdot 10^{-9}$ (m^{-1}) represents a resuspension factor assumed constant, characteristic of aged deposition material (Anspaugh et al. 1975). It is assumed that the resuspended activity deposits on the plants near the soil from which it was suspended. Downwind transport of resuspended activity is not considered. The factor of 224 is the soil area density to a depth of 15 cm of 224 kg/m^2, and 15 cm is the plow depth through which the contamination is distributed. This value is included so that only the top centimeter of material (1/15 of the total) is considered available for resuspension. The leaf concentration as calculated above represents the time integral over a 70-year period.

The radionuclide concentration in edible parts of the plant includes material from direct deposition plus material from root uptake:

$$P_{ca}(i,p,t) = L_{ca}(i,p,t)\ T_{vp} + S_{ca}(i,t)\ B_{iv} \qquad (4.8.6)$$

where $P_{ca}(i,p,t)$ = time integral of plant concentrations for plant type p for radionuclide i and time period t (person-Ci-yr^2/kg)

T_{vp} = translocation factor of externally deposited radionuclides to edible parts of the plant (dimensionless)

B_{iv} = concentration ratio for plant uptake of radionuclide i, Ci/kg (wet weight plant) per Ci/kg (dry weight soil)

and other terms are as previously defined.

The concentration used for calculating uptake by population is the plant concentration for plant pathways. For animal pathways, the uptake is calculated as:

$$A_{ca}(i,p,t) = P_{ca}(i,p,t)\ S_{ip}\ Q_p \qquad (4.8.7)$$

where $A_{ca}(i,p,t)$ = time integral of animal product concentration for radionuclide i, animal product p, and time period t, period-Ci-yr^2/kg (person-Ci/yr^2/L for milk)

S_{ip} = transfer coefficient of radionuclide i from daily intake by animal to edible portion of animal product, Ci/L (milk) per Ci/day or Ci/kg (animal product) per Ci/day

Q_p = the consumption rate of contaminated feed or forage by the animal for animal product p (kg/day).

The waterborne pathway analysis uses the water concentration $W_c(i,t)$ to determine the following environmental concentrations:

- $S_{cw}(i,t)$, soil concentration for radionuclide i for the current period t for irrigation deposition, person-Ci-yr^2/kg
- $S_{dw}(i,t)$, sediment deposition concentration for radionuclide i for current period t for shoreline of contaminated water body, person-Ci-yr^2/m^2

- $L_{cw}(i,p,t)$, leaf concentrations for radionuclide i, plant type p, and time period t for irrigation deposition and resuspension, person-Ci-yr^2/kg
- $P_{cw}(i,p,t)$, plant concentration of radionuclide i and pathway p, from irrigation deposition onto plant and root uptake through soil, person-Ci-yr^2/kg.

The soil concentration at the end of the period is calculated assuming uniform deposition over the period.

$$S_{cw}(i,t) = \frac{W_c(i,t)\ I\ T_i}{224} \left(\frac{1 - e^{-\lambda_b T}}{\lambda_b}\right) \tag{4.8.8}$$

where I = irrigation rate (L/m^2 mo)
T_i = irrigation period (mo/yr)
224 = soil area density (kg/m^2).

The exponential term represents the integral over the 70-year period.

The concentration in the sediment is calculated similarly as:

$$S_{dw}(i,t) = W_c(i,t)\ 25300 \tag{4.8.9}$$

where 25300 is the constant to represent deposition to sediment, L/m^2/yr. The value of the sediment deposition constant (25300) is the same as that described in Section 4.7.7 with the units converted.

The concentration on leaves is calculated for contributions from direct irrigation deposition plus resuspension from soil:

$$L_{cw}(i,p,t) = \frac{0.25}{Y_p} [W_c(i,t) \bullet I \bullet 12 + s_{cw}(i,t) \bullet 0.47\ V_{di}] \left(\frac{1 - e^{-\lambda_{ei} T_p/365}}{\lambda_{ei}}\right) \tag{4.8.10}$$

where 0.25 = plant interception fraction for irrigation (dimensionless)

Y_p = plant yield for plant type p (kg/m^2)

12 = unit conversion constant (mo/yr)

0.47 = conversion factor for resuspension

0.47 = (10^{-9} m^{-1}) (3.156 • 10^7 sec/yr) (224 kg/m^2) (1/15)

V_{di} = deposition velocity of resuspended activity (m/sec)

λ_{ei} = environmental weathering constant for 14-day half time, yr^{-1}

$\lambda_{ei} = \lambda_{ri} + 18.0838$.

The radionuclide concentration in edible parts of the plant is calculated for root uptake plus direct deposition as

$$P_{cw}(i,p,t) = L_{cw}(i,p,t)\ T_{vp} + S_{cw}(i,t)\ B_{iv} \qquad (4.8.11)$$

where T_{vp} = translocation factor of externally deposited radionuclides to edible parts of plant (dimensionless)

B_{iv} = concentration ratio for plant uptake of radionuclide i, Ci/kg (wet weight plant) per Ci/kg (dry weight soil).

The total uptake of plants during the 70-year period is given by the above plant concentration parameter. For animal products, uptake is calculated for animal consumption of plants plus animal consumption of water as

$$A_{cw}(i,p,t) = S_{ip}\ [P_{cw}(i,p,t)\ Q_p + W_c(i,t)\ Q_{pw}] \qquad (4.8.12)$$

where $A_{cw}(i,p,t)$ = time integral of animal product p, concentration in time t, for radionuclide i from waterborne pathways, person-Ci-yr^2/kg (person-Ci-yr^2/L for milk)

S_{ip} = transfer coefficient of radionuclide i from daily intake by animal to edible portion of animal product p, Ci/L (milk) per Ci/day or Ci/kg (animal product) per Ci/day

Q_p = the consumption rate of contaminated feed or forage by animal for animal type p (kg/day)

Q_{pw} = the consumption rate of water by animal for animal type p (L/d).

The time-integrated concentration in aquatic foods is calculated from the water concentrations as

$$A_{fw}(i,p,t) = W_c(i,t)\ B_{ip} \tag{4.8.13}$$

where $A_{fw}(i,p,t)$ = time-integrated concentration of radionuclide i in aquatic food p (person-Ci-yr^2/kg)

B_{ip} = bioaccumulation factor for radionuclide i and aquatic food p (Ci/kg per Ci/L).

The time-integrated water concentration for the drinking water pathway is calculated as

$$A_{dw}(i,t) = W_c(i,t)\ C_i \tag{4.8.14}$$

where $A_{dw}(i,t)$ = time-integrated concentration in drinking water for radionuclide i and time period t (person-Ci-yr^2/L)

C_i = water purification plant cleanup factor (dimensionless).

The radionuclides tritium and carbon-14 are handled in the special manner described in Section 4.7.9.

4.8.5 Long-Term Pathway Dose Calculations

The total dose received by the regional population is estimated as the sum of contributions from all pathways. The doses are calculated as the population dose received in each 70-year time period from material released to the environment during that period plus all previous periods. Precalculated dose conversion factors are used to estimate dose from uptake and environmental concentration. The exposure pathways are described in the following sections.

Air Submersion

Contributions for external exposure from air submersion are included for 1) submersion in the release plume, 2) submersion in resuspended activity from an initial airborne release, and 3) submersion in suspended activity from an initial irrigation water deposition. The dose is calculated as

$$D_{oei} = D_{ei}\ \lambda_{ri}\ 3.156 \cdot 10^{7}\ [A_c(i,t) + 1.49 \cdot 10^{-8} \cdot (S_{ca}(i,t) + S_{cw}(i,t))] \quad (4.8.15)$$

where D_{oei} = population dose from air submersion to organ o from radionuclide i (person-rem)

D_{ei} = external exposure dose conversion factor for air submersion (rem per Ci-sec/m^3)

λ_{ri} = radiological decay constant for radionuclide i (yr^{-1})

$3.156 \cdot 10^7$ = conversion factor (sec/yr)

$A_c(i,t)$ = time-integrated air concentration of radionuclide i in time period t (person-Ci-yr^2/m^3)

$1.49 \cdot 10^{-8}$ = resuspension factor constant (kg/m^3)

= $(1 \cdot 10^{-9}\ m^{-1})$ (224 kg soil/m^2) (1/15)

$S_{ca}(i,t)$ = soil concentration parameter from airborne release of radionuclide i for time period t (person-Ci-yr^2/kg)

$S_{cw}(i,t)$ = soil concentration parameter from waterborne release of radionuclide i for time period t (person-Ci-yr^2/kg).

The contribution from deposited material is based on the concentration at the end of the current period. This concentration is assumed to occur throughout the period, which is a conservative assumption by no more than a factor of two. Resuspension is based on a constant resuspension factor of $10^{-9}\ m^{-1}$, representing resuspension of aged deposited material (Anspaugh et al. 1975). The resuspended activity is assumed to expose individuals in the vicinity of the soil from which it was suspended. Downwind transport of resuspended activity is not considered. The decay constant, λr_i, is included to convert the units of radionuclide concentration from mass to activity. The calculations are performed in units proportional to mass to meet requirements of the chain decay processor, BCHAIN.

Inhalation

Inhalation exposure includes contributions from the released airborne activity plus the resuspended activity from airborne and irrigation water deposition. The dose is calculated as:

$$D_{ohi} = D_{hio}\ 3.156 \cdot 10^{7}\ \lambda_{ri}\ [A_c(i,t) + 1.49 \cdot 10^{-8} \tag{4.8.16}$$

$$(S_{ca}(i,t) + S_{cw}(i,t))]$$

where D_{ohi} = dose from inhalation exposure from organ o from radionuclide i (person-rem)

D_{hio} = inhalation dose conversion factor for radionuclide i and organ o (rem per Ci-sec/m^3)

and other terms are as previously defined.

Terrestrial Ingestion Pathways

Terrestrial pathways include ingestion of crops and animal products. The seven terrestrial ingestion pathways available are vegetable, grain, eggs, milk, beef, pork, and poultry. The dose for each pathway is calculated from the time-integrated food-product concentration. For plants, the dose is calculated as

$$D_{oti} = D_{gio}\ \lambda_{ri}\ U_p\ [P_{ca}(i,p,t) + P_{cw}(i,p,t)] \tag{4.8.17}$$

and for animal products, the dose is calculated as

$$D_{oti} = D_{gio}\ \lambda_{ri}\ U_p\ [A_{ca}(i,p,t) + A_{cw}(i,p,t)] \tag{4.8.18}$$

where D_{oti} = dose from terrestrial ingestion pathways for organ o (person-rem)

D_{gio} = ingestion dose conversion factor for radionuclide i and organ o (rem/Ci)

U_p = the usage rate by humans of food product p (kg/yr or L/yr for milk)

$P_{ca}(i,p,t)$ = time integral of plant concentration from airborne pathways for radionuclide i, plant type p, and time period t (person-Ci-yr^2/kg)

$P_{cw}(i,p,t)$ = time integral of plant concentration from waterborne pathways for radionuclide i, plant type p, and time period t (person-Ci-yr^2/kg)

$A_{ca}(i,p,t)$ = time integral of animal product concentration from airborne pathways for radionuclide i, animal product p, and time period t (person-Ci-yr^2/kg or person-Ci-yr^2/L for milk)

$A_{cw}(i,p,t)$ = time integral of animal product concentration from waterborne pathways for radionuclide i, animal product p, and time period t (person-Ci-yr^2/kg or person-Ci-yr^2/L for milk).

The total dose from terrestrial ingestion pathways is calculated by summing contributions from all plant and animal product food types.

Aquatic Ingestion Pathways

Ingestion pathways resulting from release of radionuclide to surface or ground water include ingestion of drinking water and aquatic foods. The five pathways available are fish, crustacea, molluscs, water plants, and drinking water. The dose for each pathway is calculated from the time-integrated aquatic media concentration as follows for aquatic foods:

$$D_{oai} = D_{gio}\ \lambda_{ri}\ U_a\ A_{fw}(i,p,t) \tag{4.8.19}$$

and for drinking water:

$$D_{oai} = D_{gio}\ \lambda_{ri}\ U_a\ A_{dw}(i,t) \tag{4.8.20}$$

where D_{oai} = dose from ingestion of aquatic food or water for organ o (person-rem)

U_a = the usage rate by humans of aquatic-food pathway a (kg/yr or L/yr for drinking water)

$A_{fw}(i,p,t)$ = time integral of aquatic food p, concentration for radionuclide i, in time period t (person-Ci-yr^2/kg)

$A_{dw}(i,t)$ = time integral of drinking water concentration for radionuclide i in time period t (person-Ci-yr^2/L).

External Exposures

External exposures result from proximity to contaminated ground, shoreline, and water. Swimming and shoreline doses are calculated from the time-integrated sediment concentration and water concentration as

$$D_{oew} = \lambda_{ri} \left[S_{dw}(i,t)\ D_{os}\ U_{sh}\ W + W_c(i,t)\ D_{ow}\ U_{sw}\right] \qquad (4.8.21)$$

where D_{oew} = dose from external exposure to shoreline and water for organ o (person-rem)

D_{os} = external dose factor for organ o for exposure to contaminated soil or shoreline (rem/h per Ci/m2)

D_{ow} = external dose factor for organ o for submersion in contaminated water (rem/h per Ci/L)

U_{sh} = time of exposure to contaminated shoreline (h/yr)

U_{sw} = time of exposure to contaminated water (h/yr)

$S_{dw}(i,t)$ = sediment concentration parameter for radionuclide i for the current time period t (person-Ci-yr/m^2)

$W_c(i,t)$ = time integral of water concentration for radionuclide i and time period t (person-Ci-yr^2/L)

W = shore-width factor for shoreline exposure (dimensionless).

The shore-width factor is an approximate correction to the infinite-plane geometry of the external exposure factors. To correct for the actual geometry of a river bank or beach, a shore-width factor is applied corresponding to the particular exposure situation. Suggested shore-width factors are given in Table 4.31. Contaminated soil can result from deposition of airborne material or from irrigation with contaminated water. The dose from external exposure to contaminated soil is calculated as

$$D_{oes} = \lambda_{ri}\ E_t\ D_{ow}\ 224\ \left[S_{ca}(i,t) + S_{cw}(i,t)\right] \qquad (4.8.22)$$

where D_{oes} = dose from external exposure to soil for organ o (person-rem)

E_t = time of exposure to contaminated ground (h/yr)

$S_{ca}(i,t)$ = soil concentration due to airborne deposition of radionuclide i at the end of time period t (person-Ci-yr/kg)

$S_{CW}(i,t)$ = soil concentration due to waterborne deposition of radionuclide i at the end of time period t (person-Ci-yr/kg)

224 = soil areal density (kg/m^2).

and other terms are as previously defined. Note that the external exposure is based on the integrated soil concentration for the current 70-year period.

5.0 SOLUTION TECHNIQUES

The GENII package of computer codes is written in standard FORTRAN 77 using a Leahey compiler. Most routines are simple algebraic solutions, and no special logic is employed. The exception is the INTDF code, which calculates internal dose factors and uses a general purpose solver for ordinary differential equations. The solver used is from the ODEPACK collection developed at Lawrence Livermore National Laboratory (Hindmarsh 1983). The specific portion if ODEPACK used is called LSODES.

The LSODES package solves explicit systems of stiff differential equations. Stiffness is related to the rate constants of the equations and may require large numbers of iterations for some solution techniques. LSODES uses a backwards differentiation formulation, based on the multistep methods first implemented by C. W. Gear (1971). The following description was adapted from a publication by Hindmarsh (1983):

> When solving a stiff system of size N, of the general form
>
> $$\dot{y} \equiv dy/dt = f(t,y)$$
>
> the LSODES package makes use of the Jacobian matrix of partial derivates
>
> $$J = \partial f/\partial y$$
>
> For stiff problems, LSODES uses the Backward Difference Formula (BDF)
>
> $$yn = \sum_{i=1}^{q} \alpha_i \, y_{n-1} + h \, \beta_0 \, \dot{y}_n$$
>
> $$= a_n + h \, \beta_0 \, f(t_n, y_n)$$
>
> where again q is the order (here $1 \leq q \leq 5$), and $\beta_0 > 0$. Stiffness makes functional iteration fail to converge for the step sizes of

interest, because of strong dependencies in f upon y. Therefore, LSODES uses a modified Newton iteration

$$-P\,[y_{n(m+1)} - y_{n(m)}] = y_{n(m)} - a_n - h\,\beta_0\,f(t_n, y_{n(m)})$$

where P is an NxN matrix approximating the Jacobian of the algebraic system to be solved:

$$P \simeq I - h\,\beta_0\,J,\ J = \partial f/\partial y$$

(Here I denotes the NxN identity matrix.) Again a prediction $y_{n(o)}$ is formed from an analogous explicit formula. This iteration differs from a true Newton method in that J is only evaluated periodically. In fact, J is evaluated only at predicted values $y_{n(o)}$ and only on those steps where a new value appears necessary, on the basis of a convergence failure or other indication. The same value of P (or its LU decomposition, if used) is used over all iterations in any one step, and typically also over several time steps, until a reevaluation of J and P is called for. (In the case of the LSODES solver, P is sometimes updated and LU-decomposed without a reevaluation of J.) Again, h and q are both varied to meet local error tolerance requirements.

In applying the BDF method to large stiff problems, it is important to note that a numerical solution of the linear system

$$Px = r$$

(x = correction vector, r = residual vector)

can very often easily take advantage of a sparse structure in P. This is accomplished either through suitable structured LU decompositions, or through iterative linear system methods that use a given matrix structure. The use of structure is especially important in solving ODE systems that come from time-dependent partial differential equation (PDE) systems by the method of lines, whereby spatial variables are discretized, leaving ODE's in time.

The LSODES package solves explicit systems $\dot{y} = f$, but treats the Jacobian matrix J as a general sparse matrix in the stiff case. In LSODES, linear systems are solved using parts of the Yale Sparse Matrix Package (YSMP) (Eisenstat et al. 1977a and 1977b). Recall that the systems to be solved have the form

$$Px = r,\ P = I - h\beta_0 J$$

where x is a correction vector, h is the step size, and β_0 is a scalar depending on the current method order. The solution of these systems involves several phases:

(a) Determination of sparsity structure. This is inferred from calls to the f routine.

(b) Determination of pivot order. Diagonal pivot locations are chosen, and the choice is based on maintaining maximum sparsity. This is done by YSMP (ODRV module) (Eisenstat et al. 1977a). The ordering algorithm (minimum degree algorithm) operates only on a symmetric sparsity structure, and in LSODES the structure used for this is that of $J + J^T$.

(c) Symbolic LU factorization of the matrix P. This is based only on sparsity and the pivot order, and uses the module in YSMP designed for nonsymmetric matrices with compressed pointer storage (CDRV module) (Eisenstat et al. 1977b).

(d) Construction of J. This is done internally by difference quotients. The number of f evaluations needed is kept to a minimum by a column grouping technique due to Curtis, Powell, and Reid (1974). J is stored internally in an appropriate packed form. Evaluations of J are done only occasionally, as explained below.

(e) Construction of $P = I - h\beta_0 J$. LSODES does not force a reevaluation of J whenever the existing P is deemed unsuitable for the corrector iterations. Instead, when the value of J contained in the stored value of P is likely to be usable (and P is not, only because $h\beta_0$ has changed significantly), then a new matrix P is constructed from the old one, with careful attention to roundoff error. This cuts down greatly on the total number of J evaluations.

(f) Numerical LU factorization of P. This is done by YSMP (CDRV module) in sparse form, and the array containing P is saved in the process. Because of the absence of partial pivoting for numerical stability, this operation can conceivably fail. However, this has only rarely been observed in practice, and if it does occur (with a current value of J), the step size h gets reduced and the difficulty disappears.

(g) Solution of $Px = r$. This is done by YSMP (CDRV module) using the existing sparse factorization of P. Because a modified Newton iteration is used, many values of r (i.e., many linear systems) can arise for the same P, and the separation of the various phases takes advantage of that fact.

The first three phases and part of the fourth (column grouping for difference quotients) are normally done only at the start of the problem. However, the user can specify that the sparsity structure is to be redetermined in the middle of the problem, and then these operations are repeated.

6.0 REFERENCES

American Society of Mechanical Engineers (ASME). 1986. Quality Assurance Program Requirements for Nuclear Facilities. ANSI/ASME NQA-1, American National Standards Institute, New York, New York.

Anspaugh, L. R., J. H. Shinn, P. L. Phelps, and N. C. Kennedy. 1975. "Resuspension and Redistribution of Plutonium in Soils." Health Phys. 29:571-582.

Baes, C. F., and R. D. Sharp. 1981. Predicting Radionuclide Leaching From Root Zone Soil From Assessment Applications. CONF-81606, Oak Ridge National Laboratory, Oak Ridge, Tennessee.

Baker, D. A., G. R. Hoenes, and J. K. Soldat. 1976. FOOD - An Interactive Code to Calculate Internal Radiation Doses from Contaminated Food Products. BNWL-SA-5523, Pacific Northwest Laboratory, Richland, Washington.

Bateman, H. 1910. "Solution of a System of Differential Equations Occurring in the Theory of Radio-active Transformations." Proc. Cambridge Phil. Soc. 15:423-427.

Blizard, E. P., ed. 1962. "Shielding." Reactor Handbook, Vol. III. Interscience Publishers, New York, New York.

Briggs, G. A. 1984. "Plume Rise and Buoyancy Effects." Atmospheric Science and Power Production, pp. 327-366. DE84005177 (DOE/TIC-27601), U.S. Department of Energy, Washington, D.C.

Brown, K. M. 1973. "Computer Oriented Algorithms for Solving Systems of Simultaneous Nonlinear Algebraic Equations." In Numerical Solution of Systems of Nonlinear Algebraic Equations. Academic Press, Inc., New York, New York.

Brown, K. M., and S. Lin. 1973. A FORTRAN Package for Multiple Linear Regression. University of Minnesota, Minneapolis, Minnesota.

Chamberlain, A. C. 1967. "Transport of Lycopodium Spores and Other Small Particles to Rough Surfaces." Proc. Roy. Soc. London. A296:45-70.

Codell, R. B., K. T. Key, and G. Whelan. 1982. A Collection of Mathematical Models for Dispersion in Surface Water and Ground Water. NUREG-0868, U.S. Nuclear Regulatory Commission, Washington, D.C.

Csanady, G. T. 1973. Turbulent Diffusion in the Environment. D. Reidel, Boston, Massachusetts.

Curtis, A. R., M. J. D. Powell, and J. K. Reid. 1974. "On the Estimation of Sparse Jacobian Matrices." J. Inst. Math. Applic. 13:117-119.

Dillman, L. T. 1974. "Absorbed Gamma Dose Rate for Immersion in a Semi-Infinite Radioactive Cloud." Health Phys. 27:571.

Dunster, H. J., Chairman. 1971. Handbook of Radiological Protection Part 1: Data. SNB 11-360079-8. Radioactivity Advisory Committee, Department of Employment, Department of Health and Social Security, Ministry of Health and Social Services, Northern Ireland. Her Majesty's Stationary Office, London, England.

Eisenstat, S. C., M. C. Gursky, M. H. Schultz, and A. H. Sherman. 1977a. Yale Sparse Matrix Package: I. The Symmetric Codes. Research Report No. 112, Department of Computer Sciences, Yale University, New Haven, Connecticut.

Eisenstat, S. C., M. C. Gursky, M. H. Schultz, and A. H. Sherman. 1977b. Yale Sparse Matrix Package: II. The Nonsymmetric Codes. Research Report No. 114, Department of Computer Sciences, Yale University, New Haven, Connecticut.

Engel, R. L., J. Greenborg, and M. M. Hendrickson. 1966. ISOSHLD - A Computer Code for General Purpose Isotope Shielding Analysis. BNWL-236, Pacific Northwest Laboratory, Richland, Washington.

Etherington, H., ed. 1958. Nuclear Engineering Handbook, 1st ed. McGraw-Hill Book Company, New York, New York.

Eve, I. S. 1966. "A Review of the Physiology of the Gastro-Intestinal Tract in Relation to Radiation Doses from Radioactive Materials." Health Phys. 12:131.

Gear, C. W. 1971. Numerical Initial Value Problems in Ordinary Differential Equations, pp. 158-166. Prentice-Hall, Englewood Cliffs, New Jersey.

Gifford, F. A. 1961. "Use of Routine Meteorological Observations for Estimating Atmospheric Dispersion." Nucl. Safety. 2:47-51.

Gifford, F. A. 1968. "An Outline of Theories of Diffusion in the Lower Layers of the Atmosphere." Meteorological and Atomic Energy - 1968, pp. 65-116, TID-24190, U.S. Atomic Energy Commission, National Technical Information Service, Springfield, Virginia.

Gifford, F. A. 1976. "Turbulent Diffusing Typing Schemes - A Review." Nucl. Safety. 17:68-86.

Golder, D. 1972. "Relations Among Stability Parameters in the Surface Layer." Boundary Layer Meteorol. 3:47-58.

Goldstein, H. 1959. Fundamental Aspects of Reactor Shielding. Addison-Wesley Publishing Co., Inc., Reading, Massachusetts.

Govaerts, P., I. Mertens, and J. G. Kretzschmer. 1983. Application of the DOSDIM-Model to Assess Doses Due to Deposited Materials Subsequent to an Accidental Atmospheric Release. Studiecentrum voor Kernenergie, Mol, Belgium.

Hindmarsh, A. C. 1983. "Toward A Systemized Collection of ODE Solvers." Scientific Computing, R. S. Stepleman, ed. 10th IMACS World Congress on Systems Simulation and Scientific Computation, North-Holland Publishing Company, Amsterdam, The Netherlands.

Hosker, R. P. 1984. "Flow and Diffusion Near Obstacles." Atmospheric Science and Power Production, pp. 241-326. DE84005277 (DOE/TIC-27601), U.S. Department of Energy, Washington, D.C.

Houston, J. R., D. L. Strenge, and E. C. Watson. 1974. DACRIN: A Computer Program for Calculating Organ Dose from Acute or Chronic Radionuclide Inhalation. BNWL-B-389, Pacific Northwest Laboratory, Richland, Washington.

International Commission on Radiological Protection (ICRP). 1966. "Deposition and Retention Models for Internal Dosimetry of the Human Respiratory Tract." Health Phys. 12:173.

International Commission on Radiological Protection (ICRP). 1972. Metabolism of Compounds of Plutonium and Other Actinides. ICRP Publication 19, Pergamon Press, New York, New York.

International Commission on Radiological Protection (ICRP). 1973. Alkaline Earth Metabolism in Adult Man. ICRP Publication 20, Pergamon Press, New York, New York.

International Commission on Radiological Protection (ICRP). 1975. Report of the Task Group on Reference Man. ICRP Publication 23, Pergamon Press, Oxford, Great Britain.

International Commission on Radiological Protection (ICRP). 1977. Recommendations of the International Commission on Radiological Protection. ICRP Publication 26, Pergamon Press, New York, New York.

International Commission on Radiological Protection (ICRP). 1979-1982. Limits for Intakes of Radionuclides by Workers. ICRP Publication 30, Pergamon Press, New York, New York:
Part 1 - Annals of the ICRP Vol. 2 No. 3/4 (1979a)
Supplement to Part 1 - Annals of the ICRP Vol. 3, No. 1-4 (1979)
Part 2 - Annals of the ICRP Vol. 4 No. 3/4 (1980)
Supplement to Part 2 - Annals of the ICRP Vol. 5 (1981)
Part 3 Including Addendum to Parts 1 and 2 - Annals of the ICRP Vol. 6 No. 2/3 (1981)
Supplement A to Part 3 - Annals of the ICRP Vol. 7 No. 1-3 (1982)
Supplement B to Part 3 Including Addendum to the Supplements of Parts 1 and 2 - Annals of the ICRP Vol. 8, No. 1-3 (1982)
Index to ICRP Pubilcation No. 30 - Annals of the ICRP Vol. 8, No. 4 (1982)

International Commission on Radiological Protection (ICRP). 1979b. Radionuclide Release into the Environment Assessment of Doses to Man. ICRP Publication 29, Pergamon Press, New York, New York.

International Commission on Radiological Protection (ICRP). 1986. The Metabolism of Plutonium and Related Elements. ICRP Publication 48, Pergamon Press, New York, New York.

Jaquish, R. E. 1987. Environmental Monitoring at Hanford for 1986. PNL-6120, Pacific Northwest Laboratory, Richland, Washington.

Jaquish, R. E., and B. A. Napier. 1987. A Comparison of Environmental Radionuclide Concentrations Calculated by a Mathematical Model with Measured Concentrations. PNL-SA-14720, Pacific Northwest Laboratory, Richland, Washington.

Johnson, J. R. 1982. "Fetal Thyroid Dose from Intakes of Radioiodine by the Mother." Health Phys. 43(4):573-582.

Johnson, J. R., and M. B. Carver. 1981. "A General Model for Use in Internal Dosimetry." Health Phys. 41:341-348.

Johnson, J. R., and R. C. Myers. 1981. "Alkaline Earth Metabolism: A Model Useful in Calculating Organ Burdens, Excretion Rates and Committed Effective Dose Equivalent Conversion Factors." Radiation Protection Dosimetry. 1(2):87-95.

Johnson, W. B., E. Shelar, R. E. Ruff, H. B. Singh, and L. Salas. 1975. Gas Tracer Study of Roof-Vent Effluent Diffusion at Millstone Nuclear Power Station. AIF/NESP-007b, Atomic Industrial Forum, Washington, D.C.

Kao, S. K. 1984. "Theories of Atmospheric Transport and Diffusion." Atmospheric Science and Power Production, pp. 109-239. DE84005177 (DOE/TIC-27601), U.S. Department of Energy, Washington, D.C.

Kennedy, W. E., Jr., R. A. Peloquin, B. A. Napier, and S. M. Neuder. 1986. Intruder Dose Pathway Analysis for the Onsite Disposal of Radioactive Wastes: the ONSITE/MAXII Computer Program. NUREG/CR-3620, Supplement No. 1, U. S. Nuclear Regulatory Commission, Washington, D. C.

Kennedy, W. E., Jr., R. A. Peloquin, B. A. Napier, and S. M. Neuder. 1987. Intruder Dose Pathway Analysis for the Onsite Disposal of Radioactive Wastes: the ONSITE/MAXII Computer Program. NUREG/CR-3620, Supplement No. 2, U. S. Nuclear Regulatory Commission, Washington, D. C.

Kimbrough, R. D., H. Falk, P. Stehr, and G. Fries. 1983. "Health Implications of 2,3,7,8,-Tetrachlorodibenzodioxin (TDCC) Contamination of Residential Soil." In Proceedings of Public Health Risks of the Dioxins, October 19-20, 1983. William Kaufmann, Los Angeles, California.

Kocher, D. C. 1979. Dose-Rate Conversion Factors for External Exposure to Photon and Electron Radiation from Radionuclides Occurring in Routine Releases from Nuclear Fuel Cycle Facilities. NUREG/CR-0494, U. S. Nuclear Regulatory Commission, Washington, D.C.

Kocher, D. C. 1981a. Dose-Rate Conversion Factors for External Exposure to Photons and Electrons. NUREG/CR-1918, U. S. Nuclear Regulatory Commission, Washington, D.C.

Kocher, D. C. 1981b. Radioactive Decay Data Tables: A Handbook of Decay Data for Application to Radiation Dosimetry and Radiological Assessments. DOE/TIC-11026, U. S. Department of Energy, Washington, D.C.

Mansius, C. A. 1969. A Revised Photon Probability Library For Use With ISOSHLD-III. BNWL-236 SUP 2, Pacific Northwest Laboratory, Richland, Washington.

Martin, D. O., and J. A. Tikvart. 1968. "A General Atmospheric Diffusion Model for Estimating the Effects on Air Quality of One or More Source." Presented at 61st Annual Meeting of the Air Pollution Control Association (APCA), APCA, St. Paul, Minnesota.

McKenzie, D. H., L. L. Cadwell, K. A. Gano, W. E. Kennedy, Jr., B. A. Napier, R. A. Peloquin, L. A. Prohammer, and M. A. Simmons. 1986. Estimation of Radiation Dose to Man Resulting from Biotic Transport: The Bioport/MAXI1 Software Package. NUREG/CR-2675 Vol. 5, U.S. Nuclear Regulatory Commission, Washington, D.C.

Murty, R. C. 1965. "Effective Atomic Numbers of Heterogeneous Materials." Nature. 207:398-399.

Napier, B. A., R. L. Roswell, W. E. Kennedy, Jr., and D. L. Strenge. 1980. ARRRG and FOOD - Computer Programs for Calculating Radiation Dose to Man from Radionuclides in the Environment. PNL-3180, Pacific Northwest Laboratory, Richland, Washington.

Napier, B. A., W. E. Kennedy, Jr., and J. K. Soldat. 1980. PABLM - A Computer Program to Calculate Accumulated Radiation Dose from Radionuclides in the Environment. PNL-3209, Pacific Northwest Laboratory, Richland, Washington.

Napier, B. A., R. A. Peloquin, W. E. Kennedy, Jr., and S. M. Neuder. 1984. Intruder Dose Pathway Analysis for the Onsite Disposal of Radioactive Wastes: The ONSITE/MAXI Computer Program. NUREG/CR-3620, U. S. Nuclear Regulatory Commission, Washington, D.C.

Napier, B. A., R. A. Peloquin, and D. L. Strenge. 1986. DITTY - A Computer Program for Calculating Population Dose Integrated Over Ten Thousand Years. PNL-4456, Pacific Northwest Laboratory, Richland, Washington.

Nelson, J. L. 1965. "Distribution of Sediments and Associated Radionuclides in the Columbia River Below Hanford." In Hanford Radiological Sciences Research and Development Report for 1964, ed. D. W. Reece and J. K. Green, p. 3.80. USAEC Report BNWL-36, Pacific Northwest Laboratory, Richland, Washington.

O'Brien, K., and R. Sanna. 1976. "The Distribution of Absorbed Dose-Rates in Humans from Exposure to Environmental Gamma Rays." Health Phys. 30:71.

Panofsky, H. A., and J. A. Dutton. 1984. Atmospheric Turbulence. Wiley-Interscience, New York, New York.

Pinder III, J. E., T. G. Ciravolo, and J. W. Bowling. 1988. "The Interrelationships Among Plant Biomass, Plant Surface Area, and the Interception of Particulate Deposition by Grasses." Health Phys. 55:51-58.

Ramsdell, J. V. 1988. Atmospheric Diffusion for Control Room Habitability Assessments. NUREG/CR-5055, U.S. Nuclear Regulatory Commission, Washington, D.C.

Rockwell III, T., ed. 1956. Reactor Shielding Design Manual. D. Van Nostrand Company, Inc., New York, New York.

Sagendorf, J. F., J. T. Goll, and W. F. Sandusky. 1982. XOQDOQ: Computer Program for the Meteorological Evaluation of Routine Effluent Releases at Nuclear Power Stations. NUREG/CR-4380, U.S. Nuclear Regulatory Commission, Washington, D.C.

Sehmel, G. A. 1980. "Particle and Gas Deposition: A Review." Atmos. Environment. 14:983-1011.

Schmel, G. A. 1984. "Deposition and Resuspension." Atmospheric Science and Power Production. DOE/TIC-27601, Chapter 12, U.S. Department of Energy, Washington, D.C.

Shor, R. W., C. F. Baes III, and R. D. Sharp. 1982. Agricultural Production in the United States by County: A Compilation of Information from the 1974 Census of Agriculture for Use in Terrestrial Food Chain Transport and Assessment Models. ORNL-5768. Oak Ridge National Laboratory, Oak Ridge, Tennessee.

Simmons, G. L., J. J. Regimbal, J. Greenborg, E. L. Kelley, Jr., H. H. Van Tuyl. 1967. ISOSHLD-II: Code Revision to Include Calculation of Dose Rate from Shielded Bremsstrahlung Sources. BNWL-236 SUP 1, Pacific Northwest Laboratory, Richland, Washington.

Soldat, J. K., N. M. Robinson and D. A. Baker. 1974. Models and Computer Codes for Evaluating Environmental Radiation Doses. BNWL-1754. Battelle, Pacific Northwest Laboratory, Richland, Washington.

Strenge, D. L. 1975. DACRIN - Modification of Gastrointestinal Tract Dose. BNWL-B-399 SUPP, Pacific Northwest Laboratory, Richland, Washington.

Strenge, D. L., and E. C. Watson. 1973. KRONIC - A Computer Program for Calculating Annual Average External Doses from Chronic Atmospheric Releases of Radionuclides. BNWL-B-264, Pacific Northwest Laboratory, Richland, Washington.

Strenge, D. L., E. C. Watson, and J. R. Houston. 1975. SUBDOSA - A Computer Program for Calculating External Doses from Accidental Atmospheric Releases of Radionuclides. BNWL-B-351, Pacific Northwest Laboratory, Richland, Washington.

Strenge, D. L., R. A. Peloquin, and G. Whelan. 1986. LADTAP II - Technical Reference and User Guide. NUREG/CR-4013, U. S. Nuclear Regulatory Commission, Washington, D.C.

Strenge, D. L., T. J. Bander, and J. K. Soldat. 1987. GASPAR II - Technical Reference and User Guide. NUREG/CR-4653, U.S. Nuclear Regulatory Commission, Washington, D.C.

Tadmor, J., and Y. Gur. 1969. "Analytical Expressions for Vertical and Lateral Dispersion Coefficients in Atmospheric Diffusion." Atmos. Environment. 3:688-689.

Till, J. E., and H. R. Meyer. 1983. Radiological Assessment - A Textbook on Environmental Dose Analysis. NUREG/CR-3332, U.S Nuclear Regulatory Commission, Washington, D.C.

Toombs, G. L., and P. B. Cutler, eds. 1968. Comprehensive Final Report for the Lower Columbia River Environmental Survey in Oregon, June 5, 1961 - July 31, 1967. Oregon State Board of Health, Division of Sanitation and Engineering, Salem, Oregon.

U.S. Nuclear Regulatory Commission (NRC). 1977a. Calculation of Annual Doses to Man from Routine Releases of Reactor Effluents for the Purpose of Evaluating Compliance with 10 CFR Part 50, Appendix I. Regulatory Guide 1.109 Revision 1, U.S. Nuclear Regulatory Commission, Washington, D.C.

U.S. Nuclear Regulatory Commission (NRC). 1977b. Estimating Aquatic Dispersion of Effluents from Accidental and Routine Reactor Releases for the Purpose of Implementing Appendix I. Regulatory Guide 1.113 Revision 1, U.S. Nuclear Regulatory Commission, Washington, D.C.

U.S. Nuclear Regulatory Commission (NRC). 1977c. Methods for Estimating Atomspheric Transport and Dispersion of Gaseous Effluents in Routine Releases from Light-Water-Cooled Reactors. Regulatory Guide 1.111 Revision 1, U.S. Nuclear Regulatory Commission, Washington, D.C.

Whicker, F. W., and T. B. Kirchner. 1987. "PATHWAY: A Dynamic Foodchain Model to Predict Radionuclide Ingestion After Fallout Deposition." Health Phys. 52:717-738.

APPENDIX

HEDUP SYSTEM DESIGN REQUIREMENTS

Hanford Environmental Dosimetry Upgrade Project (HEDUP)

TASK 02 -- SYSTEM DESIGN REQUIREMENTS

INTRODUCTION

Computer codes will be developed on this project for calculating radiation doses to humans from radionuclides released into the environment from Hanford Operations. The computer codes will be used by a number of different groups at Hanford for both retrospective calculations of the radiological impacts of routine Hanford emissions and also for prospective dose calculations, as required for various scenarios. The users would include, among others:

* PNL -- Environmental Evaluations Section, for calculating offsite radiation doses to the general public and the maximally exposed hypothetical individual, as required for preparation of the annual Hanford Environmental Monitoring Report,

-- Environmental and Risk Assessment Section, for use in developing environmental impact statements, safety analysis reports, radiological impacts studies, and environmental assessment work.

* RHO -- Nuclear and Safety Analysis Group, for accidental release analyses and routine release consequence analyses,

-- Regulatory and Safety Review Group, for evaluating the doses resulting from annual average stack releases, reviewing Clean Air Act compliance, and for performance assessments,

* HEDL -- Safety Analysis Group, for safety analyses, accident and chronic

release consequence studies, and environmental assessments,

-- Environmental and Radiological Engineering Group, for safety analyses, accident and chronic release consequence studies, and environmental assessments,

* UNC -- Radioactive Effluent Control Subsection, for estimating offsite impacts of radioactive releases for environmental assessments, decommissioning activities, and routine and accidental releases.

The computer code developed on this project must therefore be designed to match the needs of multiple users. A committee of representative potential user groups was formed under the coordination of the Hanford Dose Overview Committee to develop recommendations for computer code system design specifications to match the needs of each operating contractor.

This document identifies the system design requirements needed to make the computer codes user-friendly, compatible with current computer facilities, and well-suited to the calculational requirements of individual users.

System design requirements are grouped into the following categories:

1. General computational requirements
2. Computational facilities, hardware, and databases.
3. Code language.
4. Coding Standard and coding standard tools.
5. Input parameters and format:

   Release category and source term.

   Scenarios.

Meteorology.

Environmental transport.

Exposure pathways.

6. Dosimetry specifications.
7. Risk assessment calculations.
8. Integration of separate codes.
9. Customized pathway requirements.
10. Specialized scenario requirements.
11. Output format.
12. Graphics.
13. Documentation and instructions.
14. Error messages.
15. Updates and revisions.
16. Security.
17. Quality assurance.
18. Training.

These items are discussed in the following sections.

GENERAL COMPUTATIONAL REQUIREMENTS

The capabilities of the computer code shall include, as a minimum, the following:

1. Radiation doses for:
   (a) Acute exposure to radionuclides, with option for annual dose, 50-year committed dose, and 70-year committed dose, i.e. 1/1, 1/50, 1/70.
   (b) Chronic exposure to radionuclides, with option for annual dose, 50-year committed dose, 70-year committed dose, and the 50-year

cumulative dose and 70-year cumulative dose for a user-specified number of years of exposure, i.e. 1/1, 1/50, 1/70, x/50, and x/70.

2. Exposure pathways to include:
   (a) Direct exposure via (1) water (swimming, boating and fishing), (2) soil (surface and buried depositions), (3) air (semi-infinite cloud and the finite plume), and (4) special geometries.
   (b) Inhalation pathways, in units of rem/Ci and Sv/Bq inhaled.
   (c) Ingestion pathways, in units of rem/Ci and Sv/Bq ingested.
3. Scenario designs to include:
   (a) Acute releases by (1) air at ground level or elevated levels, or by (2) water releases.
   (b) Chronic releases by (1) air at ground level or elevated levels, or by (2) water releases.
   (c) Initial contamination of (1) soil, (2) buildings and other surfaces, and (3) water.
4. Source term variations to include:
   (a) Decay of radionuclides to start of scenario.
   (b) Input of total radionuclide inventory or specified fraction.
   (c) Input of radionuclide concentrations (Ci/g, Ci/m^3, etc.)
   (d) Release rate of radionuclides to (1) air and (2) water.
5. Interface considerations:
   (a) Atmospheric dispersion.
   (b) Geohydrology.
   (c) Biotic transport.
   (d) Surface water transport.
   (e) Special shielding calculations.
6. Target population variations by distance and sector:

(a) Offsite individuals.

(b) Offsite populations.

(c) Onsite individuals.

(d) Intruders.

COMPUTATIONAL FACILITIES, HARDWARE AND DATABASES

The computer code shall be designed for implementation on the UNIVAC-1100 to provide optimum access to the code by users at Hanford contractor facilities. The code shall secondarily be designed for in-house VAX and other minicomputer systems. Design of the code for future application to IBM-PC/AT/XT (or compatible) systems should be considered for the future.

If necessary to improve data processing speeds, provision should be made for the code could to be run on the NAS-9060 LSIS (large scale information system) computer.

The code shall be available to authorized users "on demand." A convenient facility/user interface is desirable for on-line access on a priority basis for general purpose needs, and batch mode for routine work and preparation of the Hanford environmental monitoring report.

CODE LANGUAGE

The computer code shall be written in ANSI FORTRAN-77 standard language. This choice will facilitate conversion to other computing systems, modifications of the code, and necessary updating.

CODING STANDARD AND CODING STANDARD TOOLS

Programming shall follow the guidelines of the PNL Statistical Computing Unit FORTRAN coding standard. The coding standard is intended to provide a neat, uniform, and complete form of documentation and quality control, to streamline review efforts by standardizing the format of the code, and to make software maintenance a more simple task.

All FORTRAN routines shall consist of three blocks:

1. Definition block (routine name, limitations and prerequisites, arguments, logical names and files used, routines used),
2. Implementation block (development information, modification history, algorithms, constants, parameter statements, common blocks, and variables), and
3. Code block (data statements and code).

Common blocks, often used constants (parameter statements) and often used variable names shall be handled as stated in their respective sections.

Where applicable, the programmer should localize system-dependent calls, avoid dependency on internal word size (i.e., set up a constant word size), place constants in an up-front parameter file, put variables in Common block, use device names in front of file names, and hold to a limit of one routine per file.

INPUT PARAMETERS AND FORMAT

A user-friendly, menu-driven program will facilitate use of the code by many different Hanford users. An input screen would streamline initial

data entry and specification of the type of calculation desired.

The option should be added for using a 'runstream' in place of the menu. Runstreams can be quickly copied or altered and used inplace of the menu to initialize a program run.

The code shall organize and display each input item to allow a user re-check of the data entry.

A namelist input, or the equivalent in standard FORTRAN language should be provided and standardized. The current DACRIN source term input system is much easier to use than the SUBDOSA system. The new code shall allow the user the flexibility of specifying any distance parameters desired.

The maximally exposed individual shall be determined from realistic assumptions concerning location of residence, dietary practices, and living conditions. Unlikely combinations of parameters should be avoided.

Release Category:

Both acute (accidental or one-time) and chronic releases shall be available as options in the calculation. The code shall allow 1) evaluation of acute releases via air submersion, ingestion, and inhalation pathways, and 2) evaluation of chronic releases via air submersion, inhalation, ingestion, and direct exposure (ground contamination, water immersion, etc.) pathways.

Scenarios:

By allowing the time parameters to be variable, such scenarios as the case of transient residents and intruders could be modeled by the user. The default condition, however, should be for the permanent resident.

Meteorology:

Three atmospheric dispersion models are needed in the code: 1) the straight-line gaussian model, 2) input tables of X/Q, and 3) 95 percentile X/Q. These models need to be as complete as possible to keep the results reproducible, standardized, and documented. The code should be able to handle specified distances of from 0.1 km to 72 km from the source. The release durations should be variable from as short a time as an instantaneous release, to times as long as one year.

The computer code shall allow simple incorporation of site-specific meteorology. The user shall be allowed to input X/Q values as a number, and the allowed range of X/Q values shall cover the range typical for Hanford conditions. An option shall be provided for ground-level radionuclide releases, and releases from any specified height above ground level. The straight-line model may be appropriate for most applications.

A user-friendly option shall be provided for the finite cloud model for both elevated releases and ground-level releases.

It would be useful if the code also took into account plume depletion and deposition from the plume to ground.

The PNL Atmospheric group should be involved in the preparation of the

meteorological aspects of the code.

Environmental Transport:

The code shall take into account the effect of long-term weathering of radionuclides in soil, i.e. dispersion into the below-surface soil matrix.

Exposure Pathways:

Deposition on soil shall be considered for both atmospheric deposition and irrigation using contaminated water.

The uptake of radionuclides in the soil by plants shall be accounted for using current methods. The typical user will not have input data for this pathway, and must rely on the best available models, concentration ratios, or measured concentrations as currently recommended.

The uptake of radionuclides by farm animals shall take into account the ingestion of crops and the consumption of contaminated water.

Commonly used or typical exposure pathway parameters shall be established in the code as default values.

DOSIMETRY SPECIFICATIONS

GENMOD shall replace DACRIN; however, some of the valuable input/output features of DACRIN shall be retained. Internal dosimetry calculation shall be based on ICRP-30 models and biokinetic values for radionuclide residency and transport in the body.

GENMOD incorporates additional models other than those of the ICRP. These shall be available at the option of the user. These models include the alkaline earth model, the MIRD iron model, the ^{14}C model, etc.

Provision shall be made for revising biokinetic models and input parameters as updated values become available.

The code should permit the user the option of inserting desired input parameters (e.g. breathing rate, quantity of water or foodstuffs consumed), although such usage should be considered nonstandard and so identified to the user. Standard default values should be easily recognized.

The code shall calculate the effective dose equivalent for the average member of the general public in the sector and distance of interest, as well as for the maximally exposed individual.

The code shall provide integration of doses for any time period of choice following radionuclide release. This choice should be an input parameter.

The user shall be able to set up the dose calculation to provide the annual (one year) dose and dose equivalent, the 50-year committed dose equivalent, and cumulative doses expected from both acute and chronic exposures from ground level and elevated releases, as well as liquid releases to river and drinking water pathways.

The calculation shall account for radionuclide decay "in transit," i.e., the diminishing activity of radionuclides between time of release and time

of exposure of the target individual.

DACRIN currently has the problem that erroneous results appear when dosimetry is requested for more than seven organs. The new code should permit the user to obtain dose data for all organs, including the skin.

Standard default values shall be given for breathing rates assumed for the exposed population, with the user option to change the values. Onsite occupancy factors shall be considered for the calculation of dose to the maximally exposed onsite individual.

The code shall allow the user to specify the activity median aerodynamic diameter of the inhaled aerosol for cases involving inhalation of radionuclides. The code shall calculate deposition fractions in the three major lung regions for the particle size selected, instead of prompting the user to supply those deposition fractions.

GENMOD currently provides output for Class D, W, or Y materials. Often, however, the radioactive aerosol may contain a mixture of Class D, W, and Y materials. GENMOD shall be modified to consider mixtures or combinations of different solubility classes, and produce output for that mixture.

In the foodchain pathway, an option shall be provided to specify the total crop production versus the number of people consuming those crops.

The population dose may be estimated from the average dose to the average resident times the number of persons involved. Doses shall therefore be

calculated for individuals and then multiplied by the number of persons.

Age considerations should not be necessary at this time, but provision should be made for future incorporation of age-dependent models.

RISK ASSESSMENT CALCULATIONS

The code shall calculate the 50-year and 70-year committed effective dose equivalent for individuals, and the 50-year and 70-year effective dose equivalent commitment (i.e. the collective effective dose equivalent commitment) for populations.

INTEGRATION OF SEPARATE CODES

The final product will be a single code developed from several existing codes. This code shall carefully integrate all components to facilitate ease of program execution.

CUSTOMIZED PATHWAY REQUIREMENTS

None are identified at this time. Should the need arise, they could be added to the code, and provision should be made accordingly.

SPECIALIZED SCENARIO REQUIREMENTS

The option to allow input of externally-calculated meteorology data would cover any specialized scenarios, including release of radionuclides during postulated tornado conditions.

OUTPUT FORMAT

At the beginning of the report output, the input variables shall be repeated

back for user verification.

The output shall be either in terms of (1) traditional quantities and units, such as rem, millirem, curies, etc., or (2) S.I. units, such as sievert, millisievert, becquerel, etc., at the option of the user.

The output format shall include consequences at any given input distance rather than requiring interpolation within a set group of distances (as currently the case with certain modes in SUBDOSA). The output shall match the desired input.

A summary of the doses calculated shall be provided for each contributing pathway and organ. The summary shall also include a listing of the major contributing radionuclides, and the percent of the total dose for each pathway contributed by each radionuclide.

Literature references to the published sources on which the computer code is based shall be incorporated into the program and should be callable, with printout capability, at the option of the user.

GRAPHICS

There are no graphics needs currently identified. However, it is expected that there will be a future need to graphically display numbers calculated by the computer code. An example might be a plot of X/Q versus distance from the point of release. A mechanism shall be designed therefore, to dump output into files for later graphics applications.

DOCUMENTATION AND INSTRUCTIONS

The user's manual shall be a living document that is updated whenever a change is made. User's manuals shall be maintained in three-ring binders that are easily updated. Numbered copies shall be distributed to individuals on a list of users.

ERROR MESSAGES

Error messages shall assist the user when improper input parameters or formats are used. Error messages should not occur when the data is properly entered.

All input errors shall be identified by the input routines prior to program execution.

UPDATES AND REVISIONS

Notices of code updates, and revised instructions shall be provided to potential users. A list of potential users shall be maintained so that revisions and notices may be distributed, as appropriate.

SECURITY

The computer code and associated databases are to be considered sensitive. Security measures shall be implemented to protect the code from access by unathorized users.

Configuration control shall be a feature of the software to protect the basic code from unauthorized changes. A control mechanism with sign-off procedures shall be implemented to protect the software from unauthorized

modifications. Needed changes shall be validated before modification are permitted (see Quality Assurance).

QUALITY ASSURANCE

PNL's Procedures for License-related Programs for quality assurance shall be followed. Software control procedures are given in SCP-301 through SCP 312, and include:

-- magnetic media protection and control,

-- software development specification preparation and approval,

-- computer code verification and/or validation,

-- computer code configuration control,

-- computer code acceptance testing,

-- computer code and documentation change control,

-- computer code application control,

-- final internal development review of computer code and documentation,

-- computer software transfer,

-- utility code documentation, control, testing and use,

-- documenting and reporting discrepancies found during computer code control, testing and use, and

-- determination of software classification.

TRAINING

A short training program shall be developed at the completion of the code to instruct potential users on the execution of the code. A detailed stepwise instruction manual shall also be prepared. Training should consist of class sessions and hand-out instructions, with opportunity for hands-on testing of the code.

SECTION 2

PNL-6584 Vol. 2
UC-600

Hanford Environmental Dosimetry Upgrade Project

GENII - The Hanford Environmental Radiation Dosimetry Software System

Volume 2: Users' Manual

B. A. Napier
R. A. Peloquin
D. L. Strenge
J. V. Ramsdell

November 1988

Prepared for the U.S. Department of Energy
under Contract DE-AC06-76RLO 1830

Pacific Northwest Laboratory
Operated for the U.S. Department of Energy
by Battelle Memorial Institute

Battelle

PNL-6584 Vol. 2

DISCLAIMER

This report was prepared as an account of work sponsored by an agency of the United States Government. Neither the United States Government nor any agency thereof, nor Battelle Memorial Institute, nor any or their employees, makes any warranty, expressed or implied, or assumes any legal liability or responsibility for the accuracy, completeness, or usefulness of any information, apparatus, product, or process disclosed, or represents that its use would not infringe privately owned rights. Reference herein to any specific commercial product, process, or service by trade name, trademark, manufacturer, or otherwise does not necessarily constitute or imply its endorsement, recommendation, or favoring by the United States Government or any agency thereof, or Battelle Memorial Institute. The views and opinions of authors expressed herein do not necessarily state or reflect those of the United States Government or any agency thereof.

PACIFIC NORTHWEST LABORATORY
operated by
BATTELLE MEMORIAL INSTITUTE
for the
UNITED STATES DEPARTMENT OF ENERGY
under Contract DE-AC06-76RLO 1830

Printed in the United States of America
Available from
National Technical Information Service
United States Department of Commerce
5285 Port Royal Road
Springfield, Virginia 22161

NTIS Price Codes
Microfiche A01

Printed Copy

Pages	Price Codes
001-025	A02
026-050	A03
051-075	A04
076-100	A05
101-125	A06
126-150	A07
151-175	A08
176-200	A09
201-225	A10
226-250	A11
251-275	A12
276-300	A13

8/88

NESC No. 9465-

GENII

PNL-6584, Vol. 2, Dec. 1988

PNL-6584, Vol. 2
UC-600

HANFORD ENVIRONMENTAL DOSIMETRY UPGRADE PROJECT

GENII - THE HANFORD ENVIRONMENTAL RADIATION DOSIMETRY SOFTWARE SYSTEM

VOLUME 2: USERS' MANUAL

B. A. Napier
R. A. Peloquin
D. L. Strenge
J. V. Ramsdell

November 1988

Prepared for
the U.S. Department of Energy
under Contract DE-AC06-76RLO 1830

Pacific Northwest Laboratory
Richland, Washington 99352

ABSTRACT

The Hanford Environmental Dosimetry Upgrade Project was undertaken to incorporate the internal dosimetry models recommended by the International Commission on Radiological Protection (ICRP) in updated versions of the environmental pathway analysis models used at Hanford. The resulting second generation of Hanford environmental dosimetry computer codes is compiled in the Hanford Environmental Dosimetry System (Generation II, or GENII). The purpose of this coupled system of computer codes is to analyze environmental contamination resulting from acute or chronic releases to, or initial contamination of, air, water, or soil. This is accomplished by calculating radiation doses to individuals or populations.

GENII is described in three volumes of documentation. This second volume is a Users' Manual, providing code structure, users' instructions, required system configurations, and QA-related topics. The first volume describes the theoretical considerations of the system. The third volume is a Code Maintenance Manual for the user who requires knowledge of code detail. It includes code logic diagrams, global dictionary, worksheets, example hand calculations, and listings of the code and its associated data libraries.

ACKNOWLEDGMENTS

This work was performed as part of the Dose Overview Project for the U.S. Department of Energy, Richland Operations Office. The authors would like to thank all those individuals who have helped make the development of this software package possible. Assisting in developing the project as well as the code package were the successive managers of the Dose Overview Project: Ron Kathren, the late Ed Watson, Jerry Martin, and R. Gene Schreckhise. Members of the Hanford Dose Overview Panel, including Darrell Fisher, Paul Rittman, and Janet Davis, provided the initial code capability requirements. Valuable developmental assistance was provided by S. Keith Hargrove, Mike Madison, Jaime Lara, and Phil Pohl, of the NORCUS REST and GEM programs. We especially thank Joe Soldat for extending his computer literacy as our chief test subject in code debugging. Finally, we would like to thank Peggy Upton, Marianna Cross, and their co-workers for suffering through editing and producing this series.

CONTENTS OF VOLUME 2: USERS' MANUAL

ABSTRACT iii

ACKNOWLEDGMENTS v

1.0 INTRODUCTION 1.0

2.0 CODE STRUCTURE 2.1

2.1 USER INTERACTION LEVELS 2.1

2.1.1 Level 0 User Interaction - Environmental Dosimetry 2.5

2.1.2 Level 1 User Interaction - Environmental Dosimetry 2.6

2.1.3 Level 1 User Interaction - External Dose Factors 2.6

2.1.4 Level 1 User Interaction - Internal Dose Factors 2.7

2.1.5 Level 1 User Interaction - DITTY Long-Term Calculations 2.7

2.2 DATA TRANSFER FILE DESCRIPTIONS 2.8

2.2.1 ENVIN/ENV/DOSE Input File Buffer - GENII.IN 2.8

2.2.2 Joint Frequency Input File Buffer - JOINTRE.IN . . 2.9

2.2.3 Chi/Q Input/Report File Buffer - CHIQ.IN 2.10

2.2.4 Population Grid Input File Buffer - POP.IN 2.11

2.2.5 Food Production Grid Input File Buffer - FOODPROD.IN 2.12

2.2.6 Parameter Default Value Input File Buffer - DEFAULT.IN 2.12

2.2.7 ENV Input File Buffer - ENV.IN 2.13

2.2.8 INTDF Input File Buffer - INTDF.IN 2.13

2.2.9 DITTY Input File Buffer - DITTY.IN 2.13

2.2.10 DITTY Water Release Input File Buffer - WATREL.IN 2.13

2.2.11 DITTY Air Release Input File Buffer - AIRREL.IN . . 2.14

2.2.12 EXTDF Input File Buffer - EXTDF.IN 2.15

2.2.13 ENV Report File Buffer - GENII2.OUT 2.15

2.2.14 ENVIN Report File Buffer - GENII.OUT 2.15

2.2.15 DOSE Report File Buffer - DOSE.OUT 2.15

2.2.16 ENV Media Concentration Report File Buffer - MEDIA.OUT 2.16

2.2.17 DOSE Summary Dose Report File Buffer - DOSEQA.OUT 2.16

2.2.18 ENV Report File Buffer - ENV.OUT 2.18

2.2.19 INTDF Report File Buffer - INTDF.OUT 2.19

2.2.20 INTDF CDE Yearly Increment File Buffer - CDEINC.OUT 2.19

2.2.21 INTDF CDE File Buffer - CDE.OUT 2.20

2.2.22 DITTY Report File Buffer - DITTY.OUT 2.21

2.2.23 DITTY Summary Dose Report File Buffer - DITTYQA.OUT 2.22

2.2.24 EXTDF Report File Buffer - EXTDF.OUT 2.23

2.3 DATA LIBRARY DESCRIPTIONS 2.23

2.3.1 Radionuclide Master Library - RMDLIB.DAT 2.23

2.3.2 Metabolic Data Library - METADATA.DAT 2.25

2.3.3 Radionuclide List by Atomic Number - RMDBYELE.DAT . 2.27

2.3.4 Food Transfer Library - FTRANS.DAT 2.28

2.3.5 Bioaccumulation Library - BIOAC1.DAT 2.29

2.3.6 External Dose Factor Library - GRDF.DAT 2.30

2.3.7 Radioactive Decay Data for RMDLIB - ENERGY.DAT 2.31

2.3.8 DITTY Internal Dose Factor Library - DSFCT30.DAT 2.31

2.3.9 Attenuation Coefficients and Build-Up Factor - ISOLIB.DAT 2.31

2.3.10 Committed Dose Equivalent Yearly Increment Library - DOSINC.DAT 2.33

2.3.11 Gamma Energy Library - GAMEN.DAT 2.33

2.3.12 Specific Effective Energy Library - SEEn.DAT . . . 2.34

2.4 EXTERNAL FILE NAME ASSIGNMENTS - FILENAME.DAT 2.34

3.0 USER'S INSTRUCTIONS 3.1

3.1 APPRENTICE 3.1

3.2 ENVIRONMENTAL DOSIMETRY PACKAGE: ENVIN/ENV/DOSE 3.2

3.3 EXTDF 3.26

3.3.1 Title 3.26

3.3.2 NAMELIST 3.26

3.3.3 Shield Material Specification 3.37

3.4 INTDF 3.37

3.5 DITTY 3.40

3.5.1 Case Structure Input 3.41

3.5.2 NAMELIST INPUT Parameters 3.41

3.5.3 Other Input Parameters 3.50

4.0 SYSTEM REQUIREMENTS 4.1

5.0 QUALITY ASSURANCE (QA)-RELATED TOPICS 5.1

6.0 REFERENCES 6.1

APPENDIX A - SAMPLE INPUT AND OUTPUT A.1

APPENDIX B - SELF-GENERATED DIAGNOSTICS B.1

CONTENTS OF VOLUME 1: CONCEPTUAL REPRESENTATION

ABSTRACT

ACKNOWLEDGMENTS

1.0 INTRODUCTION

1.1 DEVELOPMENT OF THE GENII SYSTEM

1.2 QUALITY ASSURANCE ISSUES

2.0 CONCEPTS IN ENVIRONMENTAL DOSIMETRY

2.1 SCENARIO DEFINITION

2.1.1 Far-Field Scenarios

2.1.2 Near-Field Scenarios

2.2 EXPOSURE PATHWAYS

3.0 CODE FUNCTIONAL DESCRIPTIONS

3.1 APPRENTICE

3.2 ENVIN

3.3 ENV

3.4 DOSE

3.5 EXTDF

3.6 INTDF

3.7 DITTY

4.0 MATHEMATICAL REPRESENTATIONS

4.1 INTERNAL DOSIMETRY

4.1.1 The General Model

4.1.2 The Alkaline Earth Model

4.1.3 The Iodine Model

4.1.4 The Tellurium/Iodine Model

4.1.5 The Radium/Radon Model

4.1.6 The Tritium and Carbon Models

4.1.7 Decay Data

4.1.8 Metabolic Data

4.1.9 Dosimetric Data

4.2 EXTERNAL DOSIMETRY

4.2.1 Point Kernel Integration

4.2.2 Mixed Mass Attenuation Coefficients

4.2.3 The Build-Up Factor

4.2.4 Conversion of Surface Dose to Effective Dose Equivalent

4.3 ATMOSPHERIC DISPERSION

4.3.1 Gaussian Plume Models

4.3.2 Diffusion Coefficients

4.3.3 Effective Release Height

4.3.4 Building-Wake Diffusion Model

4.3.5 Deposition and Depletion

4.3.6 Wind Profiles

4.3.7 Atmospheric Dispersion Model Limitations

4.4 SUBMERSION

4.4.1 Semi-Infinite Plume Model

4.4.2 Finite Plume Model

4.5 SURFACE WATER TRANSPORT MODELS

4.6 SOIL CONTAMINATION MODEL

4.6.1 Deposition Rates

4.6.2 Removal Rates

4.6.3 Biotic Transport

4.6.4 Manual Redistribution

4.7 TERRESTRIAL EXPOSURE PATHWAYS

4.7.1 Inhalation

4.7.2 Drinking Water Ingestion

4.7.3 Aquatic Food Ingestion

4.7.4 Crop Ingestion - Chronic Exposures

4.7.5 Animal Product Ingestion - Chronic Exposures

4.7.6 Terrestrial Food Pathways Models - Acute Releases

4.7.7 External Exposure

4.7.8 Population Dose Calculations

4.7.9 Special Models for ^{3}H and ^{14}C

4.8 LONG-TERM CALCULATIONS

4.8.1 Incorporation of Long-Term Sources

4.8.2 Long-Term Airborne Releases

4.8.3 Long-Term Waterborne Releases

4.8.4 Long-Term Environmental Concentrations

4.8.5 Long-Term Pathway Dose Calculations

5.0 SOLUTION TECHNIQUES

6.0 REFERENCES

APPENDIX - HEDUP System Design Requirements Report

CONTENTS OF VOLUME 3: CODE MAINTENANCE MANUAL

ABSTRACT

ACKNOWLEDGMENTS

1.0 INTRODUCTION

2.0 CODE STRUCTURE AND LOGIC DIAGRAMS

2.1 SOFTWARE CONFIGURATION CONTROL, TESTING, AND VERIFICATION

3.0 GLOBAL DICTIONARY AND COMMON BLOCK USAGE

4.0 HAND CALCULATION WORKSHEETS

5.0 LISTINGS

5.1 CODE LISTINGS

APPRENTICE

APPRENTICE

ENVIN

ENV

DOSE

DITTY

INTDF

EXTDF

UNFORMAT

UNSEE

GENERAL

COMMON BLOCKS

5.2 DATA FILE LISTINGS

RMDLIB.DAT

METADATA.DAT

RMDBYELE.DAT

FTRANS.DAT

BIOAC1.DAT

GRDF.DAT

DOSSUM.DAT

DEFAULT.IN

ENERGY.DAT

DSFCT30.DAT

ISOLIB.DAT

DOSINC.OUT

GAMEN.DAT

SEE.IN

PARAMS.DAT

APPRENTICE.DAT

FIGURES - VOL. 2

1.1 Component Programs of the GENII Structure Package 1.2

2.1 Organization and User Interaction Levels for GENII Software Package 2.2

2.2 GENII File Relationships 2.3

2.3 GENII Data File Requirements 2.4

3.1 Time Line for Periods from Release of Radioactive Material Through Completion of Dose Calculations 3.13

3.2 Point Source - Slab Shields 3.30

3.3 Line Source - Slab Shields 3.30

3.4 Spherical Source and Shields 3.31

3.5 Spherical Source - Slab Shields 3.31

3.6 Truncated Cone Source - Slab Shields 3.32

3.7 Disk Source - Detector on Centerline - Slab Shields 3.32

3.8 Cylindrical Source - Cylindrical and Slab Shields 3.33

3.9 End Cylindrical Source - Detector on Centerline - Slab Shields 3.34

3.10 Rectangular Source - Detector on Centerline - Slab Shields 3.34

3.11 Cylindrical Source - Cylindrical and Slab Shields 3.35

3.12 Annular Cylindrical Source - Cylindrical and Slab Shields . . 3.36

3.13 DITTY Input Logic Diagram 3.42

TABLES - VOL. 2

2.1 Joint Frequency File and Record Format 2.9

2.2 Chi/Q File and Record Format 2.10

2.3 Population File and Record Format 2.11

2.4 Food Distribution File and Record Format 2.12

2.5 Activity Release Data File and Record Format 2.14

2.6 Summary Dose Report Record Format 2.17

2.7 CDE Yearly Increment File and Record Format 2.19

2.8 CDE File and Record Format 2.21

2.9 DITTY Summary Dose Report Record Format 2.22

2.10 Radionuclide Master Library Record Structure 2.24

2.11 Metabolic Data Set Record Format 2.26

2.12 Food Transfer Library Record Format 2.28

2.13 Bioaccumulation Library Record Format 2.29

2.14 External Dose Factor Library Record Format 2.30

2.15 ISOLIB.DAT File and Record Format 2.32

2.16 Gamma Energy Library Record Format 2.34

2.17 File Name Assignments Record Structure 2.35

2.18 Logical Unit Numbers, Default File Names, and Usage of External Files in the GENII Software Package 2.35

3.1 IGEOM Variables and Their Relationships to Sources and Shields 3.29

3.2 Shield Material Specifications Available in EXTDF 3.38

3.3 Case Title Format 3.43

3.4 Master Radionuclide Name Format 3.43

3.5 Radiological Release Data Format 3.51

EXHIBIT - VOL. 2

3.1 Example GENII.IN File 3.3

1.0 INTRODUCTION

At the direction of the U.S. Department of Energy (DOE), the Hanford Environmental Dosimetry Upgrade Project was undertaken at Pacific Northwest Laboratory (PNL)[a] to incorporate the internal dosimetry models recommended by the International Commission on Radiological Protection (ICRP) in updated versions of the environmental pathway analysis models used at Hanford. The resulting second generation of Hanford environmental dosimetry computer codes is compiled in the Hanford Environmental Dosimetry System (Generation II or GENII). The GENII system was developed by means of tasks designed to provide a state-of-the-art, technically peer-reviewed, documented set of programs for calculating radiation doses from radionuclides released to the environment. The initial task resulted in a system design requirements report, based on input from the community of potential Hanford users, providing general descriptions of the calculations that the final programs must perform. The recommendations of this report formed the basis for the remainder of the tasks, defining the elements that determined the equation formulation and parameter selection tasks. The complete report, Hanford Environmental Dosimetry Upgrade Project (HEDUP) Task 02-System Design Requirements, is included in Volume 1 as the appendix.

The general requirements of the system to be designed included the capabilities for calculating radiation doses for acute releases, with options for annual dose, committed dose, and accumulated dose; for calculating the same types of doses from chronic releases; for evaluating exposure pathways including direct exposure via water (swimming, boating, and fishing), soil (surface and buried sources), air (semi-infinite cloud and finite cloud geometries), inhalation pathways, and ingestion pathways. The release scenarios to be included were acute releases to air from ground level or elevated sources, or to water; chronic releases to air from ground level or elevated sources, or to water; and initial contamination of soil or surfaces. Source term variations to be accounted for included decay of radionuclides to the start of the exposure scenario, input of total radioactivity or specified

---

(a) Pacific Northwest Laboratory is operated by Battelle Memorial Institute for the U.S. Department of Energy under Contract DE-AC06-76RLO 1830.

fractions, and input of measured concentrations in specified environmental media. Interfaces were to be provided for external calculations of atmospheric dispersion, geohydrology, biotic transport, and surface water transport. Target populations were identified by distance and direction for individuals, populations, and for intruders into contained sources. To accommodate the multitude of initial requirements on the design of the codes, the codes of the Hanford Environmental Dosimetry System were written to determine radiation doses to individuals or populations from a wide variety of potential exposure scenarios. The core system may be used to calculate annual doses, dose commitments, or accumulated doses from acute or chronic releases of radioactive materials to air or water.

The Hanford Environmental Dosimetry System (GENII) is composed of seven linked computer codes and their associated data libraries. These codes and their linkages are illustrated in Figure 1.1. The computer programs are of three types: user interfaces (i.e., interactive, menu-driven programs to

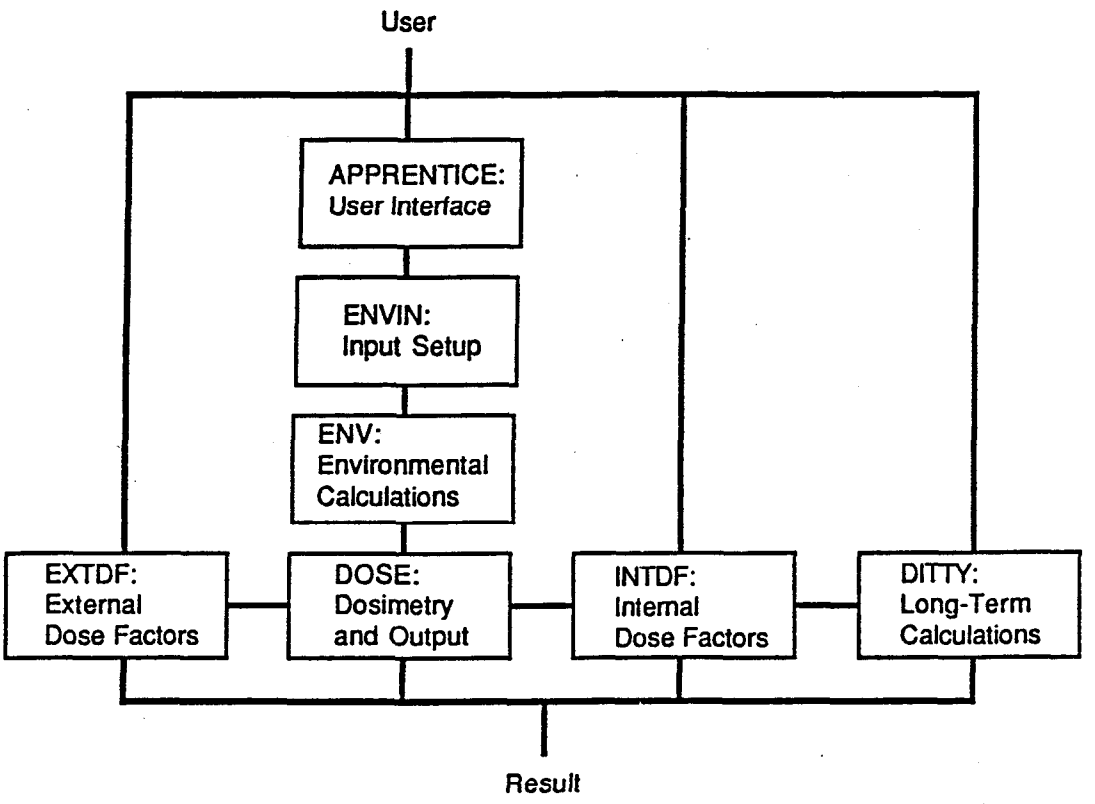

FIGURE 1.1. Component Programs of the GENII Software Package

assist the user with scenario generation and data input), internal and external dose factor generators, and the environmental dosimetry programs. For maximum flexibility, the portion of the code used for analysis of short-term scenarios (as opposed to 10,000-year migration analyses) has been divided into three interrelated but separate programs that handle input organization and checking, environmental exposure, and dose calculations, respectively.

GENII is described in three volumes of documentation. Volume 1 describes the theoretical considerations of the system, including conceptual diagrams, mathematical representation of the solutions, and descriptions of solution techniques, where appropriate. This, the second volume, is a Users' Manual, providing code structure, users' instructions, required system configurations, and topics related to quality assurance (QA). The third volume is a Code Maintenance Manual for the user who requires knowledge of code detail, including code logic diagrams, global dictionary, worksheets, example hand calculations, and listings of the code and its associated data libraries.

2.0 CODE STRUCTURE

The GENII Software Package comprises several computer programs and data libraries. The computer programs fall into three categories: 1) user interface (e.g., interactive menu-driven program to assist the user with scenario generation), 2) internal and external dose factor generators, and 3) the environmental dosimetry programs. APPRENTICE is the user interface for the short-term environmental dosimetry programs; EXTDF and INTDF generate internal and external dose rate factors, respectively; DITTY handles long-term environmental dosimetry. For maximum flexibility, the short-term environmental dosimetry portion has been divided into three interrelated but separate programs (ENVIN, ENV, and DOSE) that handle input organization and checking, environmental exposure, and dose calculations, respectively.

Two user interaction levels are defined for the GENII software package. With the first, Level 0, the user interacts with the user interface. With the second, Level 1, the user interacts directly with the text input files. Level 0 is helpful to the both the novice and the experienced user of the software package. Level 1 is intended for the experienced user of the software. DITTY, EXTDF, and INTDF are available only to the Level 1 user at this time.

Figure 2.1 depicts the software organization and the user interaction with the programs.

Figure 2.2 illustrates the data transfer mechanisms between the various program elements. Each of these input, output, and intermediate files is described in Section 2.2.

Figure 2.3 illustrates the data bases and their relationships to the various program components. These are further described in Section 2.3.

2.1 USER INTERACTION LEVELS

Two user interaction levels are defined for the GENII software package. The first, designated Level 0, is that at which most users will interact with the system. In Level 0, the user accesses the interactive program

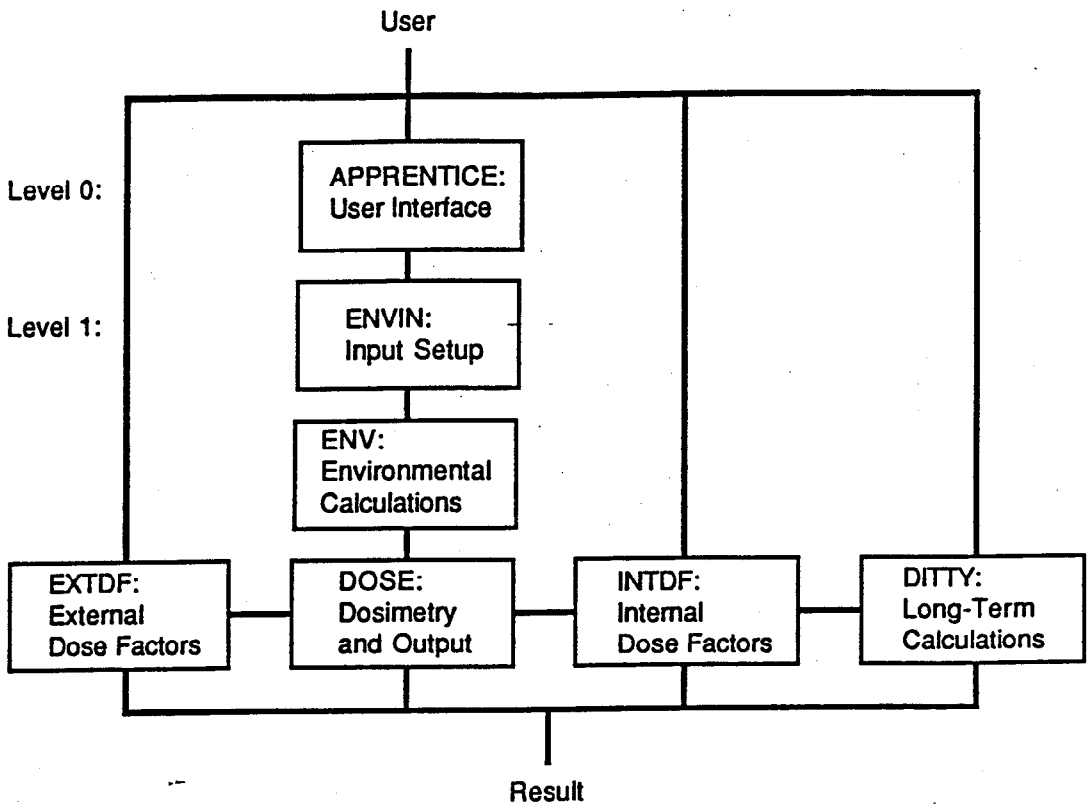

FIGURE 2.1. Organization and User Interaction Levels for the GENII Software Package

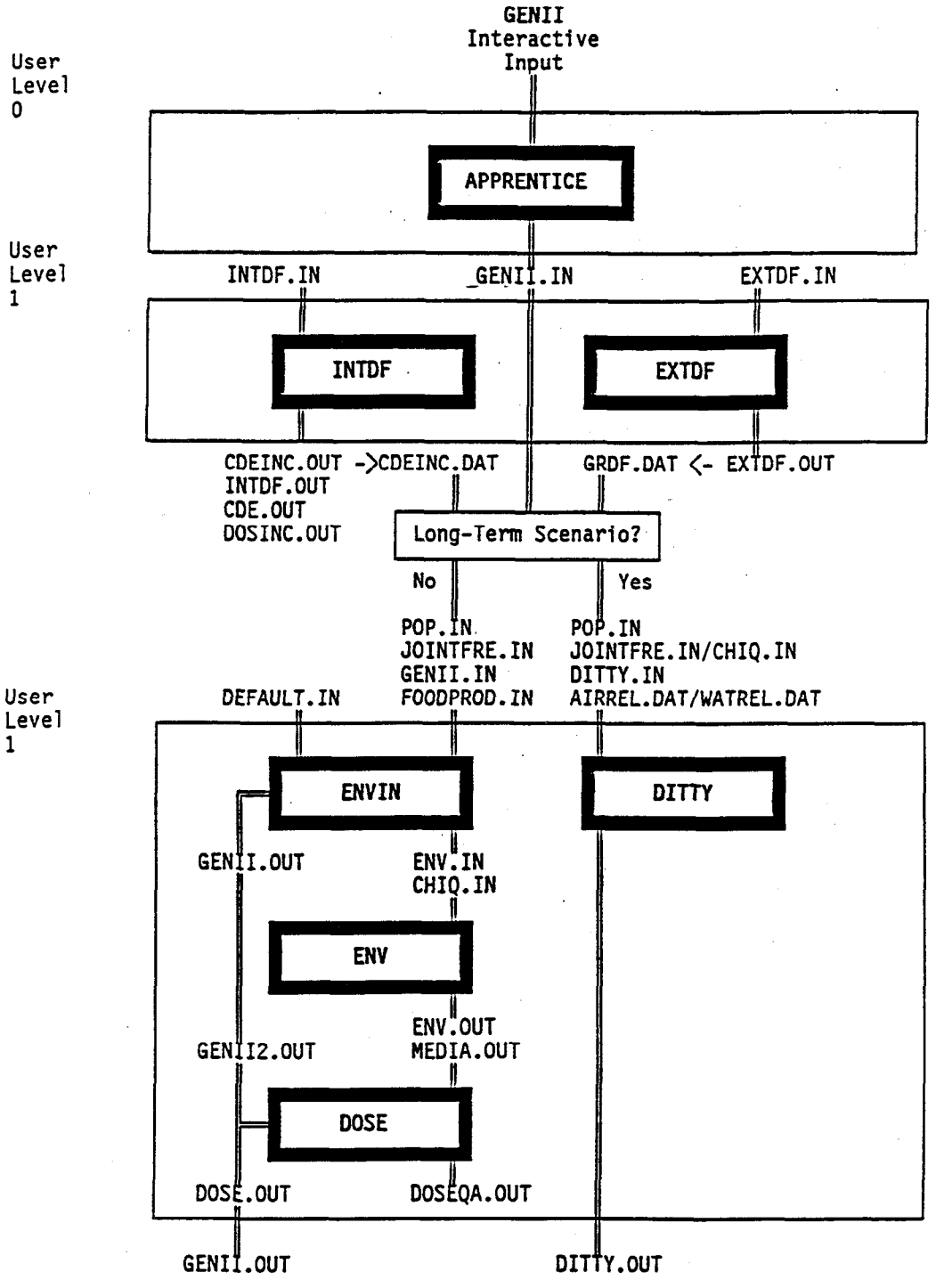

FIGURE 2.2. GENII File Relationships

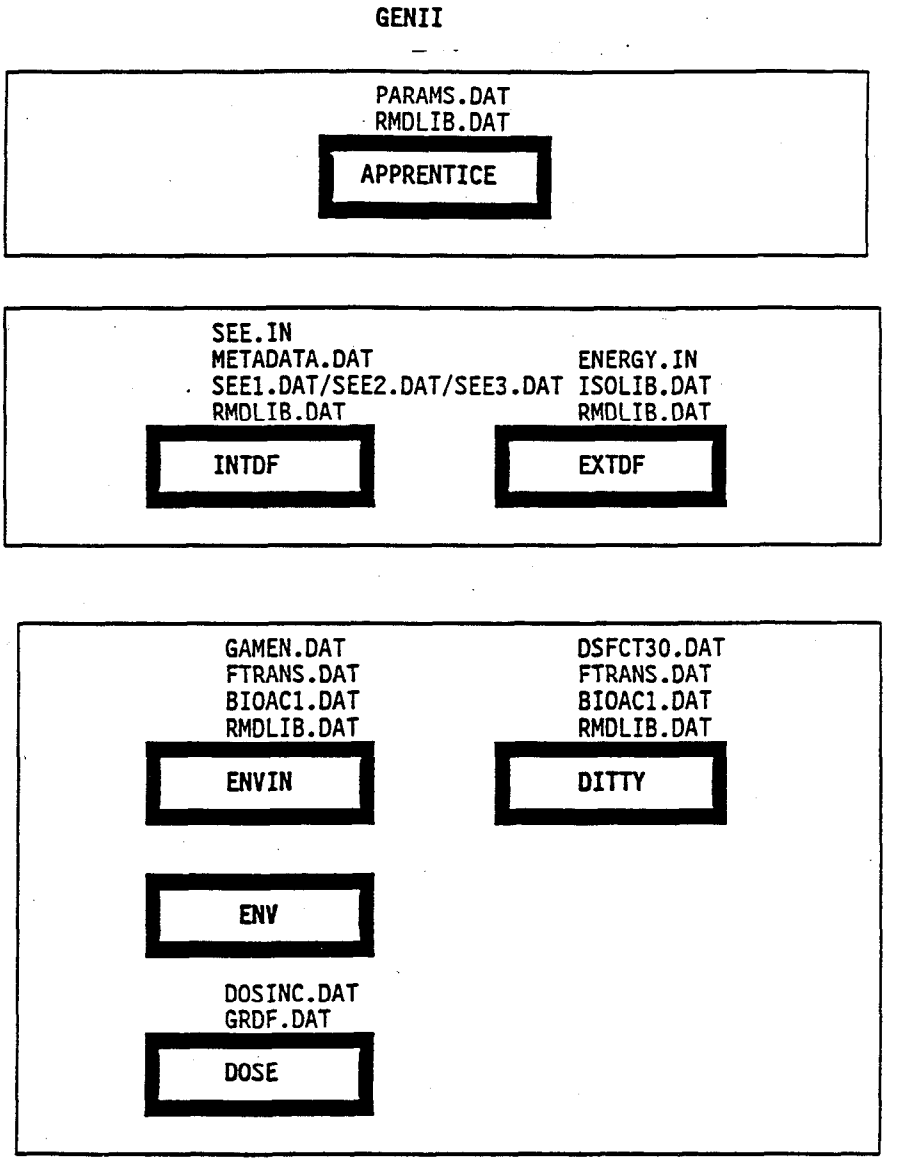

FIGURE 2.3. GENII Data File Requirements

APPRENTICE, which handles all file handling and data input necessary for most applications. In Level 1, the user himself must create input files and assure that all intermediate library and data transfer files are appropriately handled.

2.1.1 Level 0 User Interaction - Environmental Dosimetry

APPRENTICE is a menu-driven user interface intended to simplify input preparation for both novice and experienced users of this software package. APPRENTICE solicits needed information from the user and prepares a text input file for the environmental dosimetry programs. In addition, a batch-processing file is prepared to manage file handing.

Novice users will appreciate the pop-up help screens that are available in all sections of the program, the extensive logic that requests only pertinent input, default values available for all parameters, reasonable parameter value ranges, error checking for scenario incompatibilities, and checking for validity of file names. Experienced users will find that APPRENTICE has been constructed so that help does not "get in the way" of efficient scenario construction. Pull-down menus allow the user substantial flexibility to modify a scenario under construction. The user can create multiple input files to execute under control of a single batch-processing file which is generated by APPRENTICE in a relatively transparent manner. File management is available within APPRENTICE; the user may view, copy, and rename files as well as make subdirectories and change default paths.

The following is the general procedure for Level 0 users.

1. Create a work subdirectory on the same drive as that on which GENII is located:

   MD \mydir

   where **mydir** is the name of the work subdirectory you wish to create.

2. Set the work subdirectory to default:

   CD \mydir

3. Execute APPRENTICE by typing:

   \GENII\APPRENTICE

2.1.2 Level 1 User Interaction - Environmental Dosimetry

Level 1 interaction is useful for modifying previously existing GENII input files, (e.g., if a source term has changed and doses must be recalculated). APPRENTICE creates two files that the user may modify: nnnnnnnn.IN and nnnnnnnn.BAT, where nnnnnnnn is the file name specified in APPRENTICE. Nnnnnnnn.IN is the annotated input file to ENVIN/ENV/DOSE. Nnnnnnnn.BAT contains DOS commands that control program execution. Level 1 users modify these text files with a standard text editor and submit the batch-processing file as in Level 0. Sample files are included in Appendix A.

2.1.3 Level 1 User Interaction - External Dose Factors

EXTDF is a modified version of the ISOSHLD program. Input preparation for EXTDF is essentially the same as input preparation for ISOSHLD with the following exceptions:

- EXTDF is primarily a library generator. Consequently, the specification of radionuclides has been deleted from input. EXTDF automatically generates dose factors for all radionuclides listed in the master radionuclide library (file: RMDLIB.DAT). Energies of implicit daughters (listed to the right of the radionuclide in RMDLIB.DAT) are included with the parent.
- EXTDF outputs effective dose equivalent. (For surface-dose-to-effective-dose-equivalent conversion factors see Section 4.4.1 of Volume 1.)
- EXTDF expects its input to be located in the file buffer named **\GENII\EXTDF.IN** and will place output in the file buffer named **\GENII\EXTDF.OUT**. To execute, type the following commands:

```
COPY nnnnnnnn.IN \GENII\EXTDF.IN
\GENII\EXTDF
COPY \GENII\EXTDF.OUT nnnnnnnn.OUT
```

where **nnnnnnnn** is the unique file name of your EXTDF input. A sample input file is located in Appendix A.

2.1.4 Level 1 User Interaction - Internal Dose Factors

INTDF calculates integrated retentions and committed dose equivalents for radionuclides included in the master radionuclide library (file: RMDLIB.DAT).

- INTDF expects its input to be located in the file buffer named **\GENII\INTDF.IN** and will place output in the file buffer named **\GENII\INTDF.OUT**. To execute, type the following commands:

```
COPY nnnnnnnn.IN \GENII\INTDF.IN
\GENII\INTDF
COPY \GENII\INTDF.OUT nnnnnnnn.OUT
```

  where **nnnnnnnn** is the unique file name of your INTDF input. A sample input file is located in Appendix A.

2.1.5 Level 1 User Interaction - DITTY Long-Term Calculations

Execution of DITTY is essentially as documented in Napier, Peloquin, and Strenge (1986), with the following exceptions:

- DITTY expects its input to be located in the file buffers as follows:

\GENII\DITTY.IN	-	Input file
\GENII\POP.IN	-	Population file
\GENII\JOINTFRE.IN	-	Joint frequency file (in format as provided on Hanford Data Supplementary Disk)
\GENII\AIRREL.IN	-	Air release input file
\GENII\WATREL.IN	-	Water release input file

- DITTY will place output in the file buffer named **\GENII\DITTY.OUT**.
- To execute DITTY, type the following commands:

```
COPY nnnnnnnn.IN \GENII\INTDF.IN
COPY mypop.IN \GENII\POP.IN
```

```
COPY myjf.IN \GENII\JOINTFRE.IN
COPY myair.IN \GENII\AIRREL.IN
COPY mywat.IN \GENIII\WATREL.IN
\GENII\DITTY
COPY \GENII\DITTY.OUT nnnnnnnn.OUT
```

where **nnnnnnnn** is the unique file name of your DITTY input, and **mypop**, **myjf**, **myair**, **mywat** are user-prepared files.

2.2 DATA TRANSFER FILE DESCRIPTIONS

The GENII package makes use of three basic types of data files: 1) data transfer files, 2) data libraries, and 3) working buffers. The data transfer files are used to input information to the codes and to transfer intermediate results from one code to the next. Data transfer files are described in this section. The data libraries are large static files of parameters necessary for the calculations, but with which the average user need not interact. The data libraries provided with GENII are described in Section 2.3. The working buffers are created and deleted during code execution, are transparent to the user, and are not described further.

2.2.1 ENVIN/ENV/DOSE Input File Buffer - GENII.IN

Program ENVIN expects to find an input file in the file buffer named GENII.IN. APPRENTICE handles transferring the user's input file into this file buffer. Consequently, use of this buffer is transparent to the Level 0 user. APPRENTICE writes an input file (named "nnnnnnnn.IN" where nnnnnnnn is a user-supplied name) for the user's scenario and stores the file in the default subdirectory. APPRENTICE also writes a batch file (named "nnnnnnnn.BAT", where nnnnnnnn is a user-supplied name) containing DOS (IBM 1985) commands to control execution of the programs. One of the commands in the batch file copies the user-named input file into GENII.IN in the \GENII subdirectory. GENII.IN is read by subroutine READIN of program ENVIN. The format of the file is constant with the exception of the inventory section, which may vary in length. See Section 3.2 for a detailed discussion on the format, preparation, and use of the input file.

2.2.2 Joint Frequency Input File Buffer - JOINTFRE.IN

Joint frequency meteorological data is read from the file buffer JOINTFRE.IN. The user is responsible for preparing joint frequency data in the file and record formats shown in Table 2.1. The file contains values representing the percent of time for persistence of each condition for specified numbers of wind speed groups, and atmospheric stability groups for 16 sectors. The grid sectors must correspond to the directions provided in the population input file buffer POP.IN. - The formats shown in records 3 and 4 and in the joint frequency data sets are suggested; these records are processed with a free-formatted read statement. JOINTFRE.IN is read by

TABLE 2.1. Joint Frequency File and Record Format

Record Number	Field Number	Data Type	Field Size	Description
1	1	CHARACTER	80	Descriptive title
2	1	CHARACTER	80	(Not read by program. May contain additional descriptive and quality assurance data.)
3	1	INTEGER	5	Number of wind speed data groups in file
3	2	INTEGER	5	Number of atmospheric stability data groups in file
3	3	INTEGER	5	Number of seasons data groups in file (always one at this time)
3	4	INTEGER	5	Number of time-of-day data groups in file (always one at this time)
3	5	REAL	10	Height at which joint frequency data applies, m
4	1-10	REAL	7	Average wind speed for each windspeed group, m/sec
Joint Frequency Data Set				
1a	1-16	REAL	5	Percent of time for persistence of condition for directions into S, SSW, SW, ... (i.e., wind from N, NNE, NE ...)
:				
10a				(Each Joint Frequency Data Set contains data for 16 sectors [across]. Data are grouped first by atmospheric stability group and then by wind speed group.)

ACCMOD and CRONMOD in program ENVIN. An example of this file is shown with the sample problems in Appendix A of this report.

2.2.3 Chi/Q Input/Report File Buffer - CHIQ.IN

The user may request that Chi/Q values be generated from joint frequency data. If that is the case, the file buffer CHIQ.IN will contain the Chi/Q values generated upon completion of program ENVIN. Alternately, if known, the user may provide atmospheric dispersion factors as input in the file buffer CHIQ.IN. Options and file handling are controlled within APPRENTICE. ENV reads the Chi/Q values in CHIQ.IN and uses them to calculate air concentrations. If chronic exposure to a finite plume is considered, CHIQ.IN will also contain dose rate factors for each distance and direction of the grid for the six energy groups identified in Table 4.9 of Volume 1. Each data set consists of two identically formatted parts, the first for sector indices 1-8 (Wind toward: S-NNW) and the second for sector indices 9-16 (Wind toward: N-SSE). The file and record format as shown in Table 2.2 is based on the default number of distances (10).

TABLE 2.2. Chi/Q File and Record Format

Record Number	Field Number	Data Type	Field Size	Description
1	1	CHARACTER	80	Title of input file that created this file.
2	1	CHARACTER	80	(Not read by program. File creation date and time.)
3			80	(blank)
Chi/Q Data Set for Eight Sectors for Each of 10 Distances				
1a			7	(blank)
1a	1-8	INTEGER	9	Sector index, 1-8 or 9-16
2a			7	(blank)
2a	1-8	REAL	9	Effective wind speed (m/sec) for each sector indicated in data set record 1a
3a	1	REAL	7	Distance from source, m
3a	2-9	REAL	9	Chi/Q, m^3/sec, for sector indices 1-8 or 9-16, respectively
:				
12a				(One record for each distance)
13a			80	(blank)

TABLE 2.2. (contd)

Energy Group Dose Rate Factor Data Set - Six Data Sets (If Selected)

1b			7	(blank)
1b	1-8	INTEGER	9	Sector index, 1-8 or 9-16
2b	1	REAL	7	Distance from source, m
2b	2-9	REAL	9	Finite plume dose rate factor, (person rem dis/Ci MeV) for sector indices 1-8, or 9-16, respectively
:				
11b				(One record for each distance)
12b			80	(blank)

D/Q Data Set for Eight Sectors for Each of 10 Distances

1c			7	(blank)
1c	1-8	INTEGER	9	Sector index, 1-8 or 9-16
2c	1	REAL	7	Distance from source, m
2c	2-9	REAL	9	Normalized deposition factor, m^2/sec, for sector indices 1-8, or 9-16, respectively
:				
11c				(One record for each distance)
12c			80	(blank)

2.2.4 Population Grid Input File Buffer - POP.IN

Population distribution information is read from the file buffer named POP.IN. The grid used for population must correspond to the grid used for joint frequency and Chi/Q data. The file format is shown in Table 2.3. If DITTY population specification for chronic airborne releases Method Three is used, (see Section 3.5.1), population data sets should be stacked consecutively in the file for each time, T, specified in NAMELIST INPUT.

TABLE 2.3. Population File and Record Format

Record Number	Field Number	Data Type	Field Size	Description
1	1	CHARACTER	80	Title
2	1	CHARACTER	80	(Not read by program. File creation date and time.)
3			80	(blank)

TABLE 2.3. (contd)

Population Data Set

1a	1-10	INTEGER	8	Population for each distance for one sector
:				
16a				(One record for each sector starting with S)

2.2.5 Food Production Grid Input File Buffer - FOODPROD.IN

If a food production distribution is to be used for the ingestion population, option 3 (see Section 3.1 Line 115+M to 116+M) food distribution is read from the file buffer named FOODPROD.IN. A data set is read for each selected food type, terrestrial food types first followed by animal products, for each of the 10 x 16 grid points. Table 2.4 shows the file and record format for the food distribution file. FOODPROD.IN is read by module XQIN in program ENVIN.

TABLE 2.4. Food Distribution File and Record Format

Record Number	Field Number	Data Type	Field Size	Description
1	1	CHARACTER	80	Title
2	1	CHARACTER	80	(Not read by program. File creation date and time.)
3			80	(blank)

Food Distribution Data Set for Each Selected Food Type

1a	1-10	REAL	8	Food production for each grid point, kg/yr, for each of 10 distances
:				
16a				(One record for each sector starting with S)

2.2.6 Parameter Default Value Input File - DEFAULT.IN

The user has the option of changing most default parameters used in GENII. Those parameters not included in the input file because they are infrequently changed are read from the file DEFAULT.IN. The user may edit

DEFAULT.IN with a standard text editor. It is recommended, if changes are made to DEFAULT.IN, that the title line (first line of the file) be changed for QA purposes. However, all changes from default parameter values will be noted in the output file. The parameter name, previous default value, and modified value will be listed. DEFAULT.IN is processed with free-formatted read statements and includes descriptive information and units to simplify modifications. The distribution version of the DEFAULT.IN is shown in Volume 3, Section 5.2.

2.2.7 ENV Input File Buffer - ENV.IN

Program ENVIN reads the user's input file, performs validity checks on the user's scenario, reads necessary library data, writes the input parameter report, and then writes a cryptic file of parameter values into the file buffer ENV.IN. Scenario-specific parameters are written first, followed by radionuclide-specific parameters organized into decay chains. ENV.IN is subsequently read by ENV. ENV.IN is written by subroutine RITENV and read by subroutines REDCAS and REDCHA. Use of this file is transparent to the user.

2.2.8 INTDF Input File Buffer - INTDF.IN

The INTDF input file is read from the file buffer INTDF.IN. The user is responsible for copying INTDF input files into this buffer in the \GENII subdirectory. Level 1 users may interact with the INTDF internal dosimetry computer program by creating a free-formatted input file. See the input preparation instructions in Section 3.4 for details.

2.2.9 DITTY Input File Buffer - DITTY.IN

The DITTY input file is read from the file buffer named DITTY.IN. The user is responsible for copying DITTY input files into this buffer in the \GENII subdirectory. Information on preparing this file is included with the user instructions in Section 3.5. DITTY.IN is read by subroutine CASE2.

2.2.10 DITTY Water Release Input File Buffer - WATREL.IN

In DITTY, when waterborne releases are to be read from the water release input buffer (IWAT > 0 and LUW ≠ 1), a file should be prepared in the format shown in Table 2.5. The first two records, title and number of data sets, are followed by a data set for each radionuclide.

TABLE 2.5. Activity Release Data File and Record Format

Record Number	Field Number	Data Type	Field Size	Description
1	1	CHARACTER	80	Title
2	1	INTEGER	5	Number of radionuclides that activity release data are supplied for
Radionuclide Release Data Set				
1a	1	CHARACTER	2	Element symbol for the current radionuclide
1a	2	CHARACTER	6	Atomic weight symbol for the current radionuclide
1a			2	(blank)
1a	3	INTEGER	5	Number of times for which release data will be supplied, $\leq$ 300. This parameter, NT, determines the number of records in the radionuclide data set.
2a	1	REAL	10	Time at which the current release rate is defined; years since start of release based on input parameter TZR (see Section 3.5). Parameter: TA(i).
2a	2	REAL	10	Release rate, Ci/yr, for the current radionuclide at time TA(i). Read in double precision and converted to single precision.
:				
NT				There are NT data records for each radionuclide.

2.2.11 DITTY Air Release Input File Buffer - AIRREL.IN

In DITTY, when airborne releases are to be read from the air release input buffer (IAIR > 0 and LUA $\neq$ 1), a file should be prepared in the format shown in Table 2.5. The first two records, title and number of data sets, are followed by a data set for each radionuclide.

2.2.12 EXTDF Input File Buffer - EXTDF.IN

The EXTDF input file is read from the file buffer named EXTDF.IN. The user is responsible for copying EXTDF input files into this buffer in the \GENII subdirectory. Information on preparing this file is included with the user instructions in Section 3.3. EXTDF.IN is read by module EXTDF.

2.2.13 ENV Report File Buffer - GENII2.OUT

For some scenarios, information is written to the report file buffer named GENII2.OUT during ENV execution. The APPRENTICE-generated batch-process file contains a command to copy the contents of this file buffer, along with the file buffers named GENII.OUT and DOSE.OUT to create the user's report file. GENII2.OUT is written by module XQCAL.

2.2.14 ENVIN Report File Buffer - GENII.OUT

The APPRENTICE-generated batch-process file that controls ENVIN/ENV/DOSE execution contains a command to copy the contents of the file buffer named GENII.OUT, along with the file buffers GENII2.OUT and DOSE.OUT, to a user-named report file. GENII.OUT contains the portion of the report written by the program ENVIN (in subroutine RITQA), namely the input parameter report. In general, only parameters used by the given scenario are included in the report.

2.2.15 DOSE Report File Buffer - DOSE.OUT

Dose results are written to the file buffer DOSE.OUT by the subroutines DOSSUM, RITBYR, RITBYP, and RITEDE. The reports to be written are selected by the user in APPRENTICE. The minimal set of reports includes the following:

- a one-page report showing the committed (CDE) and weighted (WDE) dose equivalent by organ, the effective dose equivalent (EDE), external dose, and annual effective dose equivalent (AEDE) for the given scenario. The controlling organ, exposure pathway, and radionuclide for the scenario are identified. The inhalation EDE and ingestion EDE are also listed.
- a one-page matrix report showing the dose components and their additive interrelationships for the first three years of the dose commitment period. This report is included to aid the user in understanding the dose terminology.
- a report by radionuclide of the following doses: inhalation EDE, ingestion EDE, external dose, internal EDE, and AEDE.

In addition, the user may request reports of CDE by exposure pathway, CDE by radionuclide, and external dose by exposure pathway. The contents of DOSE.OUT including the input parameter report are written to the user-named output file. Sample problem reports, in Volume 2 Appendix A, provide examples of the various reports available.

2.2.16 ENV Media Concentration Report File Buffer - MEDIA.OUT

Media concentrations are not part of the GENII standard output. However this information is available to the Level 1 user in the file buffer MEDIA.OUT. For chronic exposure scenarios the residential air, surface soil, deep soil, ground water, and irrigation surface water concentrations are shown for each radionuclide for each year of the exposure period. The surface water concentration at the source is also shown. For acute exposures, the residential average population-weighted air concentration and surface soil concentration, as well as the time-integrated surface water concentration, are shown for each radionuclide for each year of the exposure period for each of the four seasons. It is the user's responsibility to store the contents of MEDIA.OUT under a unique file name at the completion of each scenario. An example of MEDIA.OUT is shown with the sample problems in Volume 2, Appendix A.

2.2.17 DOSE Summary Dose Report File Buffer - DOSEQA.OUT

The ENVIN/ENV/DOSE sequence is frequently used in applications that require several executions of the code. When this occurs, it is useful to have summary information available for preliminary results-checking, QA recording, and report generation. With each execution of DOSE, the file buffer named DOSEQA.OUT is appended with a one-line summary record. Table 2.6 describes each field in the summary record. This file can be copied and erased at will. It is efficient to delete the file from time to time, otherwise the file may become quite large. This report is written by module DOSSUM of program DOSE.

2.2.20 INTDF CDE Yearly Increment File Buffer - CDEINC.OUT

CDE yearly increments are written to the file CDEINC.OUT. Use of this file is transparent to the user. The output from this file is used to generate the internal dose factor library, DOSINC.OUT, that is used by program DOSE to calculate doses. The file contains data sets for each radionuclide considered in the execution organized as follows in Table 2.7.

TABLE 2.7. CDE Yearly Increment File and Record Format

Record Number	Field Number	Data Type	Field Size	Description
1	1	CHARACTER	1	Exclamation point. Indicates beginning of radionuclide data set.
1			1	(blank)
1	2	CHARACTER	2	Alphabetical element symbol as specified in the radionuclide master library
1	3	CHARACTER	6	Atomic weight and possible metastable designation as specified in the radionuclide master library
1	4	CHARACTER	8	Inhalation classification used in calculations as defined above. Included for QA.
1	5	CHARACTER	14	F_1 value used in calculations. Included for QA.
1	6	CHARACTER	13	Date of calculation. Included for QA.
1	7	CHARACTER	12	Time of calculation. Included for QA.
1			3	(blank)
1	8	CHARACTER	7	Type of exposure, either acute or chronic. Included for QA.
1	9	CHARACTER	8	Dose units. Included for file readability and QA.
2	1	INTEGER	3	Number of organs considered. Parameter: NORG
2	2-26	INTEGER	3	Organ index of each organ considered as specified in the master organ list
3	1-25	INTEGER	3	Number of years for which ingestion dose increments are supplied for each organ specified in record #2

TABLE 2.7. (contd)

Organ Data Sets for Ingestion:

1a	1	CHARACTER	1	Flag indicating ingestion ("G"). Included for file readability.
1a	2-16	REAL	8	Yearly ingestion dose increment starting with the first year of exposure for this organ, Sv/Bq or Sv/Bq-yr
2a			1	(blank)
2a	2a-15	REAL	8	Yearly ingestion dose increment as defined above
:				
n				As needed for the number of years of data for this organ as identified in record 3

Organ Data Subsets for Inhalation:

1b	1	CHARACTER	1	Flag indicating inhalation ("H"). Included for file readability.
1b	2-16	REAL	8	Yearly inhalation dose increment starting with the first year of exposure for this organ, Sv/Bq or Sv/Bq-yr
2b			1	(blank)
2b	1-15	REAL	8	Yearly inhalation dose increment as defined above
:				
n				As needed for the number of years of data for this organ as identified in record 3

This file is written by subroutine RITINC. For an example of this file format, see the listing of the file DOSINC.OUT in Section 5.2 of Volume 3.

2.2.21 INTDF CDE File Buffer - CDE.OUT

Committed dose equivalent data sets are output in a form useful for library generation in the file CDE.OUT Output from this file was used to create the DITTY internal dose factor library DSFCT30.DAT. A data set for each radionuclide considered is generated in the following format in Table 2.8.

TABLE 2.6. Summary Dose Report Record Format

Field Number	Data Type	Field Size	Description
1	CHARACTER	18	First 18 characters of the scenario title
		1	Colon as title delimiter
2	REAL	8	Effective dose equivalent from inhalation
3	REAL	8	Effective dose equivalent from ingestion
4	REAL	8	External Dose
5	REAL	8	Effective dose equivalent
6	REAL	8	Annual effective dose equivalent
7	CHARACTER	4	Dose units: rem or Sv for individual, Prem or PSv for person-rem or person-Sv
8	CHARACTER	3	Flag for organ receiving largest commitment. Flag consists of first three letters of organ name.
9	CHARACTER	3	Flag indicating environmental pathways providing largest dose contribution. Flags are: "Inh" for inhalation, "Ing" for ingestion, and "Ext" for external.
10	CHARACTER	6	Radionuclide providing largest dose contribution
11	CHARACTER	8	Date of execution
12	CHARACTER	8	Time of execution
13	CHARACTER	1	"T" if near-field scenario, "F" if far-field scenario
14	CHARACTER	1	"T" if acute exposure, "F" if chronic exposure
15	CHARACTER	1	"T" if population dose, "F" if individual dose
		1	(blank)
16	CHARACTER	24	"T" if each of environmental exposure pathways is considered, "F" if not. The environmental pathways listed in order are: 1 - external exposure from plume 2 - inhalation uptake 3 - external exposure from ground 4 - leafy vegetable ingestion 5 - root vegetable ingestion 6 - grain ingestion 7 - fruit ingestion 8 - meat ingestion 9 - poultry ingestion 10 - cow milk ingestion 11 - egg ingestion 12 - inadvertent soil ingestion 13 - water ingestion while swimming 14 - external exposure from swimming 15 - external exposure from boating 16 - external exposure from shoreline activities 17 - drinking water ingestion 18 - fish ingestion 19 - mollusk ingestion 20 - crustacea ingestion 21 - aquatic plant ingestion

TABLE 2.6. (contd)

			22 - external exposure from deep soil 23 - external exposure from buried waste 24 - (unused)
17	INTEGER	2	Length of intake (yr)
18	INTEGER	2	Length of release (yr)
19	INTEGER	2	Length of dose commitment period (yr)

2.2.18 ENV Output File Buffer - ENV.OUT

Program ENV writes yearly environmental exposure rates by pathway and radionuclide to the output file buffer ENV.OUT in subroutine RITEXP. The file is subsequently read by DOSE in subroutine DOSCTL. Use of this file is transparent to the user.

2.2.19 INTDF Report File Buffer - INTDF.OUT

INTDF.OUT contains the report generated by the INTDF program. The file consists of the following reports for each radionuclide chain:

- input and program-assigned parameter report
- optional report (if detailed report flag has been set "on" in the input file) of SEE factors for each radionuclide
- the number of nuclear transformations over the given time period in the source organs and tissues, oral and inhalation, for each radionuclide chain member
- CDE for the given time period in target organs and tissues, oral and inhalation
- statistics detailing the amount of computational work performed by the LSODES solver.

It is the user's responsibility to save the output of this file buffer under a unique name. The file is written by the subroutines RITINT and RITEND. The report for Sample Problem 5, shown in Appendix A, is an example of this report.

TABLE 2.8. CDE File and Record Format

Record Number	Field Number	Data Type	Field Size	Description
1	1	CHARACTER	2	Alphabetical element symbol as specified in the radionuclide master library
1	2	CHARACTER	6	Atomic weight, also metastable (m) designation
			7	(descriptive information)
1	3	CHARACTER	1	Translocation classification as described under RMDLIB.DAT
1			5	(descriptive information)
1	4	REAL	9	F_1 value used to calculate result. Included for QA.
1			5	(blank)
1	5	CHARACTER	10	Date of calculation. Included for QA.
1	6	CHARACTER	10	Time of calculation. Included for QA.
1	7	CHARACTER	10	Type of exposure, acute or chronic. Included for readability and QA.
1	8	CHARACTER	10	Units of result. Included for readability and QA.
2	1	INTEGER	3	Number of organs for which data is included for this radionuclide
2	2-n	INTEGER	3	Master organ index of each organ considered
3			5	(blank)
3	1-n	CHARACTER	8	Descriptive title of each organ as ordered in Record 2. Included for readability.
4	1	CHARACTER	1	Flag indicating dose factor type: "G" for ingestion. Included for readability.
4	2	INTEGER	3	Number of years in the dose commitment period. Included for QA and readability.
4	3-n	REAL	8	Ingestion committed dose equivalent, units as shown in Record 1 for each organ as ordered in Record 2.
5	1	CHARACTER	1	Flag indicating dose factor type: "H" for inhalation. Included for readability.
5	2	INTEGER	3	Number of years in the dose commitment period. Included for QA and readability.
5	3-n	REAL	8	Inhalation committed dose equivalent, units as shown in Record 1 for each organ as ordered in Record 2

2.2.22 DITTY Report File Buffer - DITTY.OUT

The input parameter report and dose results of program DITTY are written to the output file buffer DITTY.OUT. It is the user's responsibility to

store the contents of the file buffer under a unique file name. DITTY.OUT is written by modules QAPAGE and REPORT. An example of this file is the output from Sample Problem 7, found in Appendix A.

2.2.23 DITTY Summary Dose Report File Buffer - DITTYQA.OUT

DITTY is frequently used in applications that require several executions of the code. When this occurs, it is useful to have summary information available for preliminary results-checking, QA recording, and report generating. With each execution of DITTY, the file buffer named DITTYQA.OUT is appended with a one line summary record. Table 2.9 describes each field in the summary record. This file can be copied and erased at will. It is efficient to delete the file from time to time, otherwise the file may become quite large. This report is written by module REPORT.

TABLE 2.9. DITTY Summary Dose Report Record Format

Field Number	Data Type	Field Size	Description
1	CHARACTER	18	First 18 characters of the scenario title
		1	Colon as title delimiter
2	REAL	8	Cumulative population dose equivalent received by population over the 10,000-yr period
3	CHARACTER	4	Unit flag for preceding dose, "Prem" indicating person-rem
4	CHARACTER	6	Radionuclide providing largest contribution to population dose
6	INTEGER	3	Index of 70-yr period in which highest population dose increment was received
7	REAL	8	Maximum individual dose
8	CHARACTER	4	Units for preceding dose
9	CHARACTER	6	Radionuclide providing largest contribution to individual dose
10	INTEGER	3	Index of 70-yr period in which maximum individual dose was received
11	INTEGER	5	Year of scenario in which maximum individual dose was received
12	CHARACTER	8	Date of execution
13	CHARACTER	8	Time of execution

2.2.24 EXTDF Report File Buffer - EXTDF.OUT

The file buffer named EXTDF.OUT is used to store the report file from EXTDF executions. Input parameter values are printed as are selected output units. Dose factors are printed in a format that simplifies library generation. EXTDF.OUT is written by modules EXTDF and SHORT. It is the user's responsibility to store the contents of the file under a unique file name.

2.3 DATA LIBRARY DESCRIPTIONS

The data files that provide tabulated values of constants for the calculations are described in this section.

2.3.1 Radionuclide Master Library - RMDLIB.DAT

The radionuclide master data library (RMDLIB.DAT) contains all radiological decay data in addition to the specification of all radionuclides for which data is included in the GENII Software System. The radionuclides are organized into decay chains ordered by atomic number under the radionuclides highest in the chain. RMDLIB.DAT is read by subroutine RLIBIN and is used by programs ENVIN, DITTY, INTDF, and EXTDF. Calculations of radioactive decay and daughter ingrowth are performed in the subroutines CHAIN and DGCHAIN, using the decay chain data of RMDLIB.DAT and the decay equations of Bateman (1910). RMDLIB currently contains information on 245 radionuclides.

RMDLIB contains one record for each radionuclide plus a header record and a trailer record. The header record contains the file title (FORTRAN format: A80) and a blank trailer record. The balance of the records contain information as shown in Table 2.10.

TABLE 2.10. Radionuclide Master Library Record Structure

Field Number	Data Type	Field Size	Description
1	CHARACTER	2	Alphabetical element symbol. Parameter: ELTM
2	CHARACTER	6	Atomic weight, also metastable (m) designation. Parameter: AWM
3	REAL	10	Radiological half-life, days. Parameter: TR
4	INTEGER	2	Indicator of relative position in decay chain (1 is highest position)
5	INTEGER	2	Indicator of precursor in decay chain (as identified in column 4 of the precursor, zero indicates no precursors). Parameter: IFR
6	REAL	7	Branching ratio for primary precursor. Parameter: DKF
7	INTEGER	2	Indicator of alternate precursor in decay chain. Parameter: IFR
8	REAL	7	Branching ratio for alternate precursor. Parameter: DKF
9	INTEGER	4	Atomic number. Parameter: ATNO
		1	(blank)
10	CHARACTER	1	Special-purpose flag used for research applications, input as a character field to set logical flag, used by EXTDF
11	INTEGER	2	Applicable internal dosimetry model used by INTDF where: 0-use General Model, 1-use Alkaline Earth Model, 2-use Iodine Model. Parameter: IMODM
		1	(blank)
12	CHARACTER	1	Flag indicating whether radionuclide is a bone-volume seeker (V), bone-surface seeker (S), or not applicable (N). Parameter: BONED
13	CHARACTER	1	Translocation classification. Parameter: TCLASS
14	INTEGER	2	Number of implicit daughters built into radionuclide. Parameter: NDAU
15-17			First implicit daughter data set
:			:
36-38			Eighth implicit daughter data set

Each implicit daughter data set consists of three columns containing the alphabetical element symbol, atomic weight plus metastable designation, and branching ratio as specified in fields 1, 2, and 6, respectively. The associated parameter name for the branching ratio is BRANCH.

Translocation refers to the rate at which radionuclides are transported by body fluids from the lungs to the blood and GI tract after inhalation (sometimes referred to as inhalation class or solubility class). For inhalation calculations, translocation classifications are made for each

organ based on the usage of the Task Group Lung Model (ICRP 1966). The translocation flags used in RMDLIB.DAT refer to the following classes as defined by the ICRP (1966):

D - Class D Materials:	A maximum clearance time of less than a day
W - Class W Materials:	A maximum clearance time of a few days to a few months
Y - Class Y Materials:	A maximum clearance half time of six months to a few years.

Columns 1-14 are read with the FORTRAN format (A2, A6, E10.2, I2, 2(I2, F7.4), I4, 1X, A1, 1X, I1, 1X, 2A1, I2). If the number of implicit daughters is greater than 0, the record is reread with the FORTRAN format (52X, 8(A2,A6, F5.3, 1X)). RMDLIB.DAT is listed in Volume 3, Section 5.2.

2.3.2 Metabolic Data Library - METADATA.DAT

Johnson's (Johnson and Carver 1981, Johnson and Myers 1981) metabolic data library has been modified and expanded for use with the INTDF internal dosimetry program. The adult metabolic data is taken from ICRP 30 (1979a, 1980, 1981b) with minor exceptions. The library contains adult and infant data on uptake by blood, f_1 values for each inhalation class, distribution and retention in organs, as well as fraction of excretion via urine and feces. Excretion data is not used in INTDF.

The file consists of a header record containing title information and data sets for each element, adult or infant. Each data set contains three data records followed by up to four organ data subsets, followed by a single record indicating the end of the data set. Each of the organ data subsets consists of four records each, one record for each biological half time (organ/tissue sub-compartment). The last organ data subset is for remaining tissues/organs, classified as "OTHER." Organ data sets for the Alkaline Earth Model are ordered more stringently. Alkaline Earth Model data subsets are ordered as trabecular/cancellous bone, cortical bone, and bone surface, followed by "OTHER". The file format is shown in Table 2.11.

TABLE 2.11. Metabolic Data Set Record Format

Record Number	Field Number	Data Type	Field Size	Description
1	1	INTEGER	3	Atomic number of element
2	1	CHARACTER	14	Descriptive name of element, not used by program
2			1	(blank)
2	2	CHARACTER	1	Age indicator, A-Adult and I-Infant (Only adult information is processed in this version of INTDF.)
2			7	(blank)
2	3	REAL	5	Biological rate constant for the transfer compartment (blood and body fluids), d^{-1} Parameter: RTBLOOD
2	4	REAL	5	Fraction of excretion from blood via urine, (not used by INTDF)
2	5	REAL	5	Fraction of excretion from blood via feces, (not used by INTDF)
3	1	REAL	n	F_1 value for Inhalation Class D material
3	2	REAL	n	F_1 value for Inhalation Class W material
3	3	REAL	n	F_1 value for Inhalation Class Y material
Alkaline Earth Model Organ/Tissue Subset				
1a			1	(blank)
1a	1	CHARACTER	8	Bone compartment name, ("BONE CAN", "BONE COR", or "BONE SUR") or "OTHER"
1a			1	(blank)
1a	2	REAL	10	Fraction of material going from transfer compartment to each bone or OTHER sub-compartment. Parameter: TCBONE or TCOTHR
1a	3	REAL	10	Biological rate constant for each bone or OTHER sub-compartment, d^{-1}. Parameter: RTBONE or RTOTHR
1a	4	REAL	10	Fraction of material excreted via urine, (not used by INTDF)
1a	5	REAL	10	Fraction of material excreted via feces, (not used by INTDF)
:				
4a				One record for each of four sub-compartments

TABLE 2.11. (contd)

All Other Models Subset

1b		1		(blank)
1b	1	CHARACTER	8	Organ name as specified in the master organ list
1b			1	(blank)
1b	2	REAL	10	Fraction of material going from transfer compartment to each organ/tissue sub-compartment. Parameter: TCBONE, TCORG, or TCOTHR
1b	3	REAL	10	Biological rate constant for each organ/tissue sub-compartment, d^{-1}. Parameter: RTBONE, RTORG, or RTOTHR
1b	4	REAL	10	Fraction of material excreted via urine, (not used by INTDF)
1b	5	REAL	10	Fraction of material excreted via feces, (not used by INTDF)
:				
4b				One record for each of four sub-compartments.

Last Record

4			1	(blank)
4	1	CHARACTER	8	"END "

Record 1 is read in subroutine METLIB with the FORTRAN format (A14, 1X, A1, 7X, 3F5.3). Record 2 is processed with a free-formatted read. Each organ/tissue sub-compartment record is read as (1X, A8, 1X, 4E10.3). METADATA.DAT is listed in Volume 3, Section 5.2.

2.3.3 Radionuclide List By Atomic Number - RMDBYELE.DAT

To simplify scenario construction in APPRENTICE, radionuclides are displayed sorted by atomic number and mass number. The file RMDBYELE.DAT is a sorted list of radionuclides included in the master radionuclide library. The file consists of a header record with title information followed by records consisting of the two-character alphabetic symbol followed by the six-character atomic weight and possible metastable designation. RMDBYELE.DAT is read by BASIC subroutine MENU5 and is listed in Volume 3, Section 5.2.

2.3.4 Food Transfer Library - FTRANS.DAT

The food transfer factor library, FTRANS.DAT, contains factors used in programs ENV and DITTY relating concentrations of elements in soil to concentrations in farm products grown on that soil, and relating concentrations in animal feed to concentrations in animal products. The library also contains air deposition velocities. Sources of these parameters are to be published in a separate document. The file consists of a header record with title information, a second record containing column headings for file readability (not processed by the programs), followed by a record for each element included in the radionuclide master. The record format for this file is shown in Table 2.12.

TABLE 2.12. Food Transfer Library Record Format

Field Number	Data Type	Field Size	Description
1	CHARACTER	2	Alphabetical element symbol as specified in the radionuclide master library
2	REAL	9	Elemental deposition velocity from air to ground, m/sec. Parameter: DPVLT, DPVL
3	REAL	9	Food transfer coefficient for leafy vegetables/fresh animal forage, pCi/g plant (dry) per pCi/g soil (dry). Parameter: BVIT(1,n)
4	REAL	9	Food transfer coefficient for root vegetables, pCi/g plant (dry) per pCi/g soil (dry). Parameter: BVIT(2,n)
5	REAL	9	Food transfer coefficient for grains/stored animal feed, pCi/g plant (dry) per pCi/g soil (dry). Parameter: BVIT(3,n)
6	REAL	9	Food transfer coefficient for fruit, pCi/g plant (dry) per pCi/g soil (dry). Parameter: BVIT(4,n)
7	REAL	9	Food transfer coefficient for beef, d/kg. Parameter: FMIT(1,n)
8	REAL	9	Food transfer coefficient for poultry, d/kg. Parameter: FMIT(2,n)
9	REAL	9	Food transfer coefficient for cow milk, d/L. Parameter: FMIT(3,n)
10	REAL	9	Food transfer coefficient for eggs, d/kg. Parameter: FMIT(4,n)
11	REAL	9	Leaching rate (percolation) of radionuclides out of the surface soil layer (top 15 cm), yr^{-1}. Parameter: LEACHT

The FORTRAN format for each record is (A2, 9E9.2). FTRANS.DAT is read and dry plant weights are converted to wet weights in subroutines ENVLIB and FOOLIN. A listing of the file is included in Volume 3, Section 5.2.

2.3.5 Bioaccumulation Library - BIOAC1.DAT

The bioaccumulation library, BIOAC1.DAT, contains the factors used by ENV and DITTY to relate the concentration of radionuclides in aquatic biota to the concentration of radionuclides in the water. There are separate factors for fresh and salt water. Also included are factors representing the fraction of chemical elements passing through conventional municipal water treatment plants. These parameters and their selection processes will be documented in a separate report. The file consists of a header record with title information, a second record containing column headings for file readability (not processed by the programs), followed by a record for each element included in the radionuclide master library. The record format for this file is shown in Table 2.13.

TABLE 2.13. Bioaccumulation Library Record Format

Field Number	Data Type	Field Size	Description
1	CHARACTER	2	Alphabetical symbol as specified in the master radionuclide library
2	REAL	9	Bioaccumulation factor for fish in salt water, pCi/kg per pCi/L. Parameter: BIOACT(1,n)
3	REAL	9	Bioaccumulation factor for mollusk in salt water, pCi/kg per pCi/L. Parameter: BIOACT(2,n)
4	REAL	9	Bioaccumulation factor for crustacea in salt water, pCi/kg per pCi/L. Parameter: BIOACT(3,n)
5	REAL	9	Bioaccumulation factor for aquatic plants in salt water, pCi/kg per pCi/L. Parameter: BIOACT(4,n)
6	REAL	9	Bioaccumulation factor for fish in fresh water, pCi/kg per pCi/L. Parameter: BIOACT(1,n)
7	REAL	9	Bioaccumulation factor for mollusk in fresh water, pCi/kg per pCi/L. Parameter: BIOACT(2,n)
8	REAL	9	Bioaccumulation factor for crustacea in fresh water, pCi/kg per pCi/L. Parameter: BIOACT(3,n)
9	REAL	9	Bioaccumulation factor for aquatic plants in fresh water, pCi/kg per pCi/L. Parameter: BIOACT(4,n)
10	REAL	9	Drinking water clean-up factor, dimensionless. Parameter: DWCLET

The FORTRAN format for each record is (A2, 9E9.2). BIOAC1.DAT is read by subroutines ENVLIB and BIOLIN. A listing of the file is included in Volume 3, Section 5.1.

2.3.6 External Dose Factor Library - GRDF.DAT

External dose factors for air submersion, water surface, soil surface, deep soil and buried waste for each radionuclide specified in the master library are found in the file GRDF.DAT. Values in the library were calculated by the EXTDF program. All values are effective dose equivalent, calculated as the weighted sum of the organ doses.

GRDF.DAT is used by programs DOSE and DITTY. The file consists of a header record with title information, three records containing column headings for file readability (not processed by the programs), and followed by a record for each radionuclide included in the radionuclide master library in the format shown in Table 2.14.

TABLE 2.14. External Dose Factor Library Record Format

Field Number	Data Type	Field Size	Description
1	CHARACTER	2	Alphabetical element symbol as specified in the master radionuclide library
2	CHARACTER	6	Atomic weight plus possible metastable specification as included in the master radionuclide library
3	REAL	8	External dose factor for air immersion, Sv/yr per Bq/m^3. Parameter: DAIT
4	REAL	10	External dose factor at water surface, Sv/yr per Bq/L. Parameter: DBIT
5	REAL	10	External dose factor for the soil surface, Sv/yr per Bq/"m^3" to a depth of 15 cm. Input value is divided by 0.15 before storing in parameter DSIT.
6	REAL	10	External dose factor for deep soil or buried waste with a clean overburden of 15 cm, Sv/yr per Bq/m^3. Parameter: DDIT(n,1)
7	REAL	10	External dose factor for deep soil or buried waste with a clean overburden of 0.5 m, Sv/yr per Bq/m^3. Parameter: DDIT(n,2)
8	REAL	10	External dose factor for deep soil or buried waste with a clean overburden of 1.0 m, Sv/yr per Bq/m^3. Parameter: DDIT(n,3)
9	REAL	10	External dose factor for a plane surface, Sv/yr per Bq/m^2. Not used at this time.

The FORTRAN format for each record is (A2, A6, E8.2, 5E10.2). GRDF.DAT is read by subroutines REDFIL and GRDLIN. A listing of the file is included in Volume 3, Section 5.2.

2.3.7 Radioactive Decay Data for RMDLIB - ENERGY.DAT

Radioactive decay energies for the EXTDF program are read from a specialized version of DRALIST (Kocher 1981). The specialized file, named ENERGY.DAT, contains data sets for radionuclides as ordered in RMDLIB.DAT. Energies for implicit daughters, as identified in RMDLIB.DAT, have been added to the parent. Data set and record organization is the same as those of DRALIST. This file is read by module NRGLIB. ENERGY.DAT is listed in Volume 3, Section 5.2.

2.3.8 DITTY Internal Dose Factor Library - DSFCT30.DAT

Committed dose equivalents from chronic exposure for 70 years are stored in the file DSFCT30.DAT for use by DITTY. Data sets for this file are generated by INTDF. The library consists of a title record followed by a data set for each radionuclide included in RMDLIB.DAT. The format of the data sets are shown in Table 2.8. DSFCT30.DAT is listed in Volume 3, Section 5.2.

2.3.9 Attenuation Coefficients and Build-Up Factor Library - ISOLIB.DAT

EXTDF uses attenuation coefficients and build-up factors of the ISOSHLD (Engle 1966) program. This data is stored in the file named ISOLIB.DAT. Build-up factor coefficients are handled differently for energy groups 1 through 9 (0.01 to 0.1 MeV) and for groups 10 to 25 (0.1 to 3.2 MeV).

Attenuation coefficients are included for 20 common materials and are based on unit density. Mixed attenuation coefficients are calculated using Equation (4.2.3) of Volume 1. Each attenuation coefficient data set consists of three records containing data for 25 average group energies defined in Table 4.7 of Volume 1.

Build-up factors for energy groups 1 through 9 have been calculated using the "straight ahead" approximation. The build-up factors are tabulated for six atomic numbers (13, 26, 50, 74, 82, 92), five representative energies (0.01, 0.02, 0.05, 0.1, 0.2), and seven absorption mean free-path (μx) values

(1, 2, 4, 7, 10, 15, 20). Build-up factors for a particular solution are obtained by linear interpolation within this table.

The build-up factor library for groups 10 through 25 contains coefficients A, α_1, α_2 for the point isotopic source dose build-up factor [Taylor's formula (Rockwell 1956), Equation (4.2.4) in Volume 1]. These data are tabulated for seven materials: water, aluminum, iron, tin, tungsten, lead, and uranium (with effective atomic numbers 4, 13, 26, 50, 74, 82, and 92, respectively). The effective atomic number of a single shield region (in which build-up is considered characteristic of all shield regions) is used for interpolating in this library. Each build-up factor data sets consists of six records.

The file and record formats of ISOLIB.DAT are shown in Table 2.15. ISOLIB.DAT is listed in Volume 3, Section 5.2.

TABLE 2.15. ISOLIB.DAT File and Record Format

Record Number	Field Number	Data Type	Field Size	Description
1	1	CHARACTER	80	Title
Attenuation Coefficient Data Sets				
1a	1	CHARACTER	7	Material name (first record of data set only)
1a	2	INTEGER	2	Material number
1a	3	INTEGER	1	Data set record number (1, 2, or 3)
1a	4-12	REAL	7	Mass attenuation coefficient for nine energy levels
1a	13	REAL	3	Atomic number (first record of data set only)
1a	14	REAL	3	Atomic weight (first record of data set only)
Build-Up Factors for Energy Groups 10 Through 25 Data Sets				
1b			8	(Not read by program)
1b	1	INTEGER	1	Material number
1b	2	INTEGER	1	Data set record number
1b	3	REAL	7	Coefficients for eight energy groups: Records 1-2 A_1, Records 3-4 α_1, Records 5-6 α_2

TABLE 2.15. (contd)

1b	10	REAL	3	Atomic number
1b	11	INTEGER	1	Flag set to 1 if this is the last record of last data set of this type.

Build-Up Factors for Energy Groups One Through Nine Data Sets

1c	1	INTEGER	2	Atomic number
1c	2	INTEGER	2	First absorption mean free path value for which factors are given for five energies this record
1c	3	INTEGER	2	Second absorption mean free path value for which factors are given for five energies this record
1c	4-13	REAL	6	Build-up factors for five energies for absorption mean free paths as identified in fields 2 and 3

2.3.10 Committed Dose Equivalent Yearly Increment Library - DOSINC.DAT

Committed dose equivalent yearly increments are stored in binary form in the file named DOSINC.DAT. CDE yearly increment data sets for each radionuclide were generated with INTDF. The output from the file buffer named CDEINC.OUT was accumulated in the file buffer named DOSINC.OUT. A title line was added to DOSINC.OUT, and the utility program UNFORMAT was executed to generate the binary version of the file named DOSINC.DAT. Note that in the distribution package, the file DOSINC.OUT has been stripped of data, as only the title of the file is read from DOSINC.OUT during ENVIN/ENV/DOSE execution. Data set record formats are shown in Table 2.7. The text version of this file is shown in Volume 3, Section 5.2.

2.3.11 Gamma Energy Library - GAMEN.DAT

Finite plume calculations use energy per disintegration, (MeV/dis), for six energy groups for each radionuclide. The energy ranges of the six groups are shown in Table 4.9 of Volume 1. This information is stored in the file named GAMEN.DAT. The file is composed of a title record followed by records of the format shown in Table 2.16. The gamma energy library is read by module ENVLIB of program ENVIN. GAMEN.DAT is listed in Volume 3, Section 5.2.

TABLE 2.16. Gamma Energy Library Record Format

Field Number	Data Type	Field Size	Description
1	CHARACTER	2	Alphabetic element symbol as specified in the master radionuclide library
2	CHARACTER	6	Atomic weight plus possible metastable specification as included in the master radionuclide library
3-8	REAL	8	Energy per disintegration for six energy groups

2.3.12 Specific Effective Energy Library - SEEn.DAT

Specific effective energy data sets have been extracted from the ORNL data file (personal communication, Keith Eckerman) used to produce ICRP Publication 30 (1979a, 1979b, 1980, 1981a, 1981b, 1982a, 1982b) for radionuclides included in RMDLIB.DAT. Because of the volume of this data, the data has been split into three files and converted to an abbreviated (header and trailer records removed) binary format. SEE1.DAT consists of data sets for radionuclides with atomic numbers 1-43, SEE2.DAT of those with atomic numbers 44 through 80 and SEE3.DAT contains the remainder. The utility program UNSEE is used to create the binary version of the files.

2.4 EXTERNAL FILE NAME ASSIGNMENTS - FILENAME.DAT

GENII assigns each external file (data, input, or output) a unique logical unit number (LUN). All file names and there associated LUNs are transparent to the user; APPRENTICE generates the necessary commands to handle the user's input and output files. However, the experienced user in the course of research may wish to assign experimental data libraries. This is possible because all file names and LUNs are stored in the file named "FILENAME.DAT". GENII looks first in the users default directory for "FILENAME.DAT". If not found, the distribution version of the file stored in the GENII subdirectory is used. "FILENAME.DAT" consists of 49 records containing the file names for LUNs 2-50, ("FILENAME.DAT" is assigned in LUN 1). Each record contains the information shown in Table 2.17. The contents of the 49 records are shown in Table 2.18.

TABLE 2.17. File Name Assignments Record Structure

Field Number	Data Type	Field Size	Description
1	INTEGER	2	Logical unit number (Not read by the program, included for readability). Parameter: LUN
		8	(blank)
2	CHARACTER	30	File name, including drive specification and path. Parameter: FILN

The FORTRAN format for each record is (10X, A30). "FILENAME.DAT" is read by the subroutine OPNFIL and is used by all programs in the software package. A listing of "FILENAME.DAT" is shown in Volume 3, Section 5.2.

TABLE 2.18. Logical Unit Numbers, Default File Names, and Usage of External Files in the GENII Software Package

Logical Unit Number	Default File Name	File Usage
2	\GENII\RMDLIB.DAT	Radionuclide master library
3	\GENII\METADATA.DAT	Metabolic data library
4	\GENII\RMDBYELE.DAT	Radionuclide list sorted by atomic number and mass number
5	\GENII\GENII.IN	GENII input file buffer
6	\GENII\GENII.OUT	GENII report file buffer
7	\GENII\WORK.BUF	Work space used by various programs in the software package
8	\GENII\FTRANS.DAT	Food transfer library
9	\GENII\BIOAC1.DAT	Bioaccumulation library
10	\GENII\GRDF.DAT	External dose factor library
11	\GENII\ENV.IN	ENV input file buffer
12	\GENII\DOSSUM.DAT	Dose report format file
13	\GENII\ENV.OUT	ENV output file buffer
14	\GENII\DOSE.OUT	DOSE report file buffer
15	\GENII\INTDF.OUT	INTDF report file buffer
16	\GENII\CDEINC.OUT	Committed dose equivalent yearly increment INTDF output file
17	\GENII\DITTY.OUT	DITTY report file buffer
18	\GENII\INTDF.IN	INTDF input file buffer
19		unused
20	\GENII\CDE.OUT	Committed dose equivalent INTDF output file
21	\GENII\MEDIA.OUT	Air, water, and soil concentration report file buffer
22	\GENII\DEFAULT.IN	Parameter default value input file
23	\GENII\JOINTFRE.IN	Joint frequency input file buffer

TABLE 2.18. (contd)

24	\GENII\CHIQ.IN	Chi/Q input/output file buffer
25		unused
26	\GENII\ENERGY.DAT	DRALIST for RMDLIB with implicit daughters built into parent
27	\GENII\POP.IN	Population grid input file buffer
28	\GENII\GENII2.OUT	Second GENII report file buffer
29	\GENII\FOODPROD.IN	Food production grid input file buffer
30	\GENII\DSFCT30.DAT	DITTY internal dose factors
31	\GENII\WATREL.IN	DITTY water release input file buffer
32	\GENII\AIRREL.IN	DITTY air release input file buffer
33	\GENII\DITTY.IN	DITTY input file buffer
34	\GENII\ISOLIB.DAT	EXTDF ISOSHLD library
35	\GENII\EXTDF.IN	EXTDF input file buffer
36	\GENII\EXTDF.OUT	EXTDF report file buffer
37	\GENII\DOSINC.OUT	Text version of committed dose equivalent yearly increment file
38	\GENII\GAMEN.DAT	Gamma energies for each of 6 energy groups
39	\GENII\DOSEQA.OUT	Summary dose report/quality assurance log file
40	\GENII\DOSINC.DAT	Binary version of committed dose equivalent yearly increment file
41	\GENII\SEE.IN	Label format file for the utility program SEERPT
42		Unused
43		Unused
44	\GENII\SEERPT.OUT	Report file of the utility program SEERPT
45	\GENII\SEE1.DAT	Specific effective energies for radionuclides with mass numbers < 44
46	\GENII\SEE2.DAT	Specific effective energies for radionuclides with mass numbers > 43 and < 81
47	\GENII\SEE3.DAT	Specific effective energies for radionuclides with mass numbers > 80
48		Unused
49	\GENII\WORK2.BUF	Workspace used by various programs in the software package
50	\GENII\WORK3.BUF	Workspace used by various programs in the software package

3.0 USERS' INSTRUCTIONS

3.1 APPRENTICE

APPRENTICE is an interactive, menu-driven input generator for most applications of the GENII system. The code is largely self-documenting by means of numerous pull-down help screens. Description of the use of the code is therefore limited to general instructions. Detailed descriptions of the various options available in APPRENTICE are provided to the user as the code is used. General instructions on the use of APPRENTICE are:

1. Use left and right arrows on numeric keypad to move to another menu. There are 12 main menus in APPRENTICE. You will see only those menus that are appropriate for the scenario under construction.
2. Use down arrow on numeric keypad to pull a menu down.
3. Use return key to select an item.
4. Use the F1 key or select Help from the menu. Assistance is available throughout APPRENTICE by accessing pop-up help screens.
5. Use APPRENTICE to assist you with scenario construction in the following ways:
   - APPRENTICE checks for option incompatibilities and alerts you when these are discovered.
   - APPRENTICE asks questions pertinent only to the current scenario.
   - APPRENTICE provides default values for all variables. You may select between maximum individual and average individual parameters.
   - APPRENTICE checks all input variables against reasonable bounds.
6. Use APPRENTICE when scenario construction is complete to request a file name for storing your scenario. A GENII input file will be created with a file extension of ".IN". An execution file will be created with a ".BAT" extension.

7. Create multiple input files in an APPRENTICE execution if desired. Simply select "Another Scenario" after you have selected "Write file" on the final menu. APPRENTICE will return you to the first menu. All variable selections from the previous scenario remain in effect unless changed. A single execution file will be generated for processing the series of scenarios.

8. Exit APPRENTICE quickly without saving your scenario if desired. Simply press the Esc key several times until the final menu appears.

3.2 ENVIRONMENTAL DOSIMETRY PACKAGE: ENVIN/ENV/DOSE

The "main line" GENII programs are ENVIN, ENV, and DOSE. These three codes perform input checking and atmospheric dispersion calculations, environmental transport and exposure calculations, and dosimetry calculations, respectively. All calculations performed by these three codes are controlled by an input file named GENII.IN, which may be created by the user interface code APPRENTICE or directly by the user. An example of the GENII.IN file is presented as Exhibit 3.1. A line-by-line description of the parameters and options defined in GENII.IN is given in the paragraphs following the exhibit, with the code variable name in capital letters.

EXHIBIT 3.1. Example GENII.IN File

```
Line #
  1     ######################### Program GENII Input File ############  8 Jul 88 ####
  2     Title: Demonstration Case for Example
  3            \GENII\exit.in                          Created on 09-09-1988 at 10:24
  4     OPTIONS======================== Default ====================================
  5     F    Near-field scenario?      (Far-field)    NEAR-FIELD: narrowly-focused
  6     F    Population dose?         (Individual)                release, single site
  7     F    Acute release?             (Chronic)     FAR-FIELD:  wide-scale release,
  8          Maximum Individual data set used                     multiple sites
  9                                   Complete                                Complete
 10     TRANSPORT OPTIONS============ Section   EXPOSURE PATHWAY OPTIONS===== Section
 11     T  Air Transport                 1     T  Finite plume, external        5
 12     F  Surface Water Transport       2     F  Infinite plume, external      5
 13     F  Biotic Transport (near-field) 3,4   T  Ground, external              5
 14     F  Waste Form Degradation (near) 3,4   F  Recreation, external          5
 15                                            T  Inhalation uptake             5,6
 16     REPORT OPTIONS======================   F  Drinking water ingestion      7,8
 17     T  Report AEDE only                    F  Aquatic foods ingestion       7,8
 18     F  Report by radionuclide              T  Terrestrial foods ingestion   7,9
 19     F  Report by exposure pathway          T  Animal product ingestion      7,10
 20     F  Debug report on screen              F  Inadvertent soil ingestion
 21
 22     INVENTORY ##################################################################
 23
 24      4   Inventory input activity units: (1-pCi  2-uCi  3-mCi  4-Ci  5-Bq)
 25      0   Surface soil source units (1- m2  2- m3  3- kg)
 26          Equilibrium question goes here
 27
 28          --------|----Release Terms------|----------Basic Concentrations---------|
 29          Use when|  transport selected   |  near-field scenario, optionally      |
 30          --------|----------------------|---------------------------------------|
 31          Release |        Surface Buried |        Surface Deep    Ground  Surface |
 32          Radio-  |Air     Water   Waste  |Air     Soil    Soil    Water   Water  |
 33          nuclide |/yr     /yr     /m3    |/L      /unit   /m3     /L      /L     |
 34          --------|------- ------- -------|------- ------- ------- ------- -------|
 35          SR90    5.0E-02
35+1         I 131   3.0E+00
35+2         CS137   1.0E-01
35+N
36+N         --------|----Derived Concentrations-----|
37+N         Use when|   measured values are known   |
38+N         --------|-------------------------------|
39+N         Release |Terres. Animal  Drink   Aquatic|
40+N         Radio-  |Plant   Product Water   Food   |
41+N         nuclide |/kg     /kg     /L      /kg    |
42+N         --------|------- ------- ------- -------|
43+N
44+M     TIME ###################################################################
45+M
46+M     1    Intake ends after (yr)
47+M     50   Dose calc. ends after (yr)
48+M     1    Release ends after (yr)
49+M     0    No. of years of air deposition prior to the intake period
50+M     0    No. of years of irrigation water deposition prior to the intake period
```

```
51+M
52+M     FAR-FIELD SCENARIOS (IF POPULATION DOSE) ##################################
53+M
54+N     0          Definition option: 1-Use population grid in file POP.IN
55+M     0                             2-Use total entered on this line
56+M
57+M     NEAR-FIELD SCENARIOS ##########################################################
58+M
59+M               Prior to the beginning of the intake period: (yr)
60+M     0           When was the inventory disposed?  (Package degradation starts)
61+M     0           When was LOIC?  (Biotic transport starts)
62+M     0         Fraction of roots in upper soil (top 15 cm)
63+M     0         Fraction of roots in deep soil
64+M     0         Manual redistribution: deep soil/surface soil dilution factor
65+M     0         Source area for external dose modification factor (m2)
66+M     TRANSPORT ##################################################################
67+M               ====AIR TRANSPORT=====================================SECTION 1=====
68+M                      0-Calculate PM              |0        Release type (0-3)
69+M      2        Option: 1-Use chi/Q or PM value    |T        Stack release (T/F)
70+M                      2-Select MI dist & dir      |60.      Stack height (m)
71+M                      3-Specify MI dist & dir     |100.0    Stack flow (m3/sec)
72+M     0         Chi/Q or PM value                  |5.0      Stack radius (m)
73+M     0         MI sector index (1=S)              |25.      Effluent temp. (C)
74+M     0         MI distance from release point (m)|0        Building x-section (m2)
75+M     T         Use jf data, (T/F) else chi/Q grid|0        Building height (m)
76+M
77+M               ====SURFACE WATER TRANSPORT=========================SECTION 2=====
78+M     0         Mixing ratio model: 0-use value, 1-river, 2-lake
79+M     0         Mixing ratio, dimensionless
80+M     0         Average river flow rate for: MIXFLG=0 (m3/s), MIXFLG=1,2 (m/s),
81+M     0         Transit time to irrigation withdrawl location (hr)
82+M               If mixing ratio model > 0:
83+M     0             Rate of effluent discharge to receiving water body (m3/s)
84+M     0             Longshore distance from release point to usage location (m)
85+M     0             Offshore distance to the water intake (m)
86+M     0             Average water depth in surface water body (m)
87+M     0             Average river width (m), MIXFLG=1 only
88+M     0             Depth of effluent discharge point to surface water (m), lake only
89+M
90+M               ====WASTE FORM AVAILABILITY=========================SECTION 3=====
91+M     0                 Waste form/package half life, (yr)
92+M     0                 Waste thickness, (m)
93+M     0                 Depth of soil overburden, m
94+M
95+M               ====BIOTIC TRANSPORT OF BURIED SOURCE===============SECTION 4=====
96+M     T         Consider during inventory decay/buildup period (T/F)?
97+M     T         Consider during intake period (T/F)?    | 1-Arid non agricultural
98+M     0         Pre-Intake site condition..............| 2-Humid non agricultural
99+M                                                       | 3-Agricultural
100+M
101+M    EXPOSURE ###################################################################
102+M
103+M              ====EXTERNAL EXPOSURE===============================SECTION 5=====
104+M              Exposure time:                |   Residential irrigation:
```

```
105+M    8766.0      Plume (hr)                    | T        Consider: (T/F)
106+M    4380.0      Soil contamination (hr)       | 0        Source: 1-ground water
107+M    0           Swimming (hr)                 |                 2-surface water
108+M    0           Boating (hr)                  | 0        Application rate (in/yr)
109+M    0           Shoreline activities (hr)     | 0        Duration (mo/yr)
110+M    0         Shoreline type: (1-river, 2-lake, 3-ocean, 4-tidal basin)
111+M    0         Transit time for release to reach aquatic recreation (hr)
112+M    0         Average fraction of time submersed in acute cloud (hr/person hr)
113+M
114+M              ====INHALATION=====================================SECTION 6=====
115+M    8766.0    Hours of exposure to contamination per year
116+M    0         0-No resus-  1-Use Mass Loading          2-Use Anspaugh model
117+M    0           pension      Mass loading factor (g/m3)   Top soil available (cm)
118+M
119+M              ====INGESTION POPULATION===========================SECTION 7=====
120+M     1        Atmospheric production definition (select option):
121+M    0           0-Use food-weighted chi/Q, (food-sec/m3), enter value on this line
122+M                1-Use population-weighted chi/Q
123+M                2-Use uniform production
124+M                3-Use chi/Q and production grids (PRODUCTION will be overridden)
125+M    0         Population ingesting aquatic foods, 0 defaults to total (person)
126+M    0         Population ingesting drinking water, 0 defaults to total (person)
127+M    F         Consider dose from food exported out of region (default=F)
128+M
129+M              Note below: S* or Source: 0-none, 1-ground water, 2-surface water
130+M                                        3-Derived concentration entered above
131+M              ==== AQUATIC FOODS / DRINKING WATER INGESTION=========SECTION 8====
132+M
133+M    F         Salt water? (default is fresh)
134+M
135+M              USE        TRAN-  PROD-    -CONSUMPTION-  |
136+M              ?   FOOD   SIT    UCTION   HOLDUP   RATE  |
137+M              T/F TYPE   hr     kg/yr    da       kg/yr |      DRINKING WATER
138+M              --- ------ -----  -------  ------   ----- |------------------------
139+M              F   FISH    0.00  0.0E+00    0.00     0.0 | 0      Source (see above)
140+M              F   MOLLUS  0.00  0.0E+00    0.00     0.0 | T      Treatment? T/F
141+M              F   CRUSTA  0.00  0.0E+00    0.00     0.0 | 0      Holdup/transit(da)
142+M              F   PLANTS  0.00  0.0E+00    0.00     0.0 | 0      Consumption (L/yr)
143+M
144+M              ====TERRESTRIAL FOOD INGESTION=======================SECTION 9=====
145+M
146+M              USE        GROW   --IRRIGATION--          PROD-    --CONSUMPTION--
147+M              ?   FOOD   TIME   S RATE   TIME    YIELD  UCTION   HOLDUP   RATE
148+M              T/F TYPE   da     * in/yr  mo/yr   kg/m2  kg/yr    da       kg/yr
149+M              --- ------ -----  - -----  -----   -----  -------  ------   ------
150+M              T   LEAF V 90.00  0   0.0    0.0     1.5  0.0E+00    1.0     30.0
151+M              T   ROOT V 90.00  0   0.0    0.0     4.0  0.0E+00    5.0    220.0
152+M              T   FRUIT  90.00  0   0.0    0.0     2.0  0.0E+00    5.0    330.0
153+M              T   GRAIN  90.00  0   0.0    0.0     0.8  0.0E+00  180.0     80.0
154+M
155+M              ====ANIMAL PRODUCTION CONSUMPTION====================SECTION 10====
156+M
157+M              ---HUMAN---- TOTAL   DRINK   -------------STORED FEED--------------
158+M    USE       CONSUMPTION  PROD-   WATER   DIET  GROW  -IRRIGATION--        STOR-
```

```
159+M     ?   FOOD    RATE  HOLDUP UCTION  CONTAM  FRAC-  TIME  S RATE  TIME   YIELD AGE
160+M     T/F TYPE    kg/yr   da    kg/yr  FRACT.  TION   da    * in/yr mo/yr  kg/m3 da
161+M     --- ------  ------ ----- ------ -------  ----  ----  - ----- -----  ----- -----
162+M     T   BEEF     80.0  15.0   0.00    0.00  0.00  90.0  0   0.0  0.00   0.80 180.0
163+M     T   POULTR   18.0   1.0   0.00    0.00  0.00  90.0  0   0.0  0.00   0.80 180.0
164+M     T   MILK    270.0   1.0   0.00    0.00  0.00  45.0  0   0.0  0.00   2.00 100.0
165+M     T   EGG      30.0   1.0   0.00    0.00  0.00  90.0  0   0.0  0.00   0.80 180.0
166+M                                               -------------FRESH FORAGE------------
167+M         BEEF                                  0.00  45.0  0   0.0  0.00   2.00 100.0
168+M         MILK                                  0.00  30.0  0   0.0  0.00   1.50   0.0
169+M
170+M     ##########################################################################
```

Line 1: The first line is a file identifier line for the GENII.IN file. Because the file is written by and read by formatted commands, changes to the basic format can result in the inability to transfer data. This line contains the date of the last revision to the formatting of this file. Should future changes to the codes require changes to the format of this input file, this date will indicate whether or not the file will be successfully read by ENVIN.

Line 2: This line is a title line for the specific input case, TITLS.

Line 3: This line provides the name of the specific input file created by APPRENTICE that was copied into GENII.IN. It also provides the date and time at which the file was created, INFILN.

Line 4: OPTIONS header line.

Line 5: Near-field or far-field scenario option flag, NEAR. A "scenario" is a conceptual model of patterns of human activity corresponding to actions, events, and processes that result in radiation exposure to individuals or groups. A "far-field" scenario is one defined to determine the impacts of a particular release of radioactive material into a wide environment, such as doses from releases from a stack to individuals or populations downwind. In a "near-field" scenario, focus is on possible doses to an individual at a particular location resulting from initial contamination or contaminated external sources, e.g., buried waste or contaminated soil. In a near-field scenario, contamination levels in specific environmental media may be known. A far-field scenario can be characterized as coming in to a receptor. Of course, the two types are not mutually exclusive - some doses to individuals from remote sources can be calculated as either far- or near-field with the same result. Specific examples of common types of far-field and near-field scenarios include:

CHRONIC ATMOSPHERIC RELEASE - prospective or retrospective doses to individuals or populations at specified distances and directions from the source, via submersion, inhalation, deposition groundshine, and food pathways. This class of scenario is commonly used for showing compliance with regulations that apply to emission sources.

ACUTE ATMOSPHERIC RELEASES - prospective or retrospective doses to individuals or populations at specified distances and directions from an acute release via submersion, inhalation, deposition groundshine, and food pathways. This class of scenario is often used in Safety Analysis Reports (SARs) or Environmental Impact Statements (EISs).

CHRONIC SURFACE WATER RELEASES - prospective or retrospective doses to individuals or populations at specified distances downstream of a release point via swimming, boating, shoreline exposure, drinking water, aquatic foods, irrigated terrestrial foods and animal products, soil contaminated from irrigation, and other pathways associated with liquid releases. This class of calculation is also often encountered in showing compliance with regulations.

ACUTE SURFACE WATER RELEASES - prospective or retrospective doses to individuals and populations at specified distances downstream of a release point via swimming, boating, shoreline exposure, drinking water, aquatic foods, irrigated terrestrial foods and animal products, soil contaminated from irrigation, and other pathways associated with acute liquid releases. This class of calculations is also associated with SARs and EISs.

INITIAL SURFACE CONTAMINATION - individual doses resulting from contact with contaminated soil or surfaces via direct contact, resuspension, or crop uptake. Calculations of this nature can be used to analyze the impacts of spills or remedial actions.

INITIAL SUBSURFACE CONTAMINATION - individual doses resulting from contact with contaminated soil or surfaces via direct contact, resuspension, or crop uptake. The surface soil may be contaminated via manual redistribution of the material or via biotic transport. Calculations of this nature can be used to analyze the impacts of waste management options. Often a time delay may be included to take into account the radioactive decay of the source.

GROUNDWATER CONTAMINATION - prospective or retrospective doses to individuals and populations from a given water concentration via irrigation and other pathways associated with liquid releases. This class of

calculations is also often encountered when showing compliance with regulations.

CUMULATIVE EFFECTS - prospective calculations combining initial soil contamination with additional contributions from an external atmospheric or liquid source. This type of calculation is representative of how near-field and far-field calculations can conceptually be combined.

Line 6: Population or individual dose calculation flag, POPDOS. Scenarios may be constructed to calculate either doses to representative members of critical groups (individuals) or collective doses to regional populations or subpopulations. Note that individual doses may be calculated for either near-field or far-field scenarios but that population doses are defined for far-field scenarios (because locally-measured or locally-predicted values cannot be representative over wide areas).

Line 7: Acute or chronic release flag, ACUTE. For scenarios involving release of radioactive materials into the environment, the input may be either of short duration (a matter of minutes to a few days) or continuous or routine (such that annual average parameters are appropriate). Note that scenarios involving exposure to pre-existing soil, vegetation, or ground water contamination must be treated as chronic.

Line 8: This line contains a reminder of the type of individual exposure parameters used for inhalation, ingestion, and external exposure. Two sets of recommended default parameters are provided to ease data entry for the APPRENTICE code. The "Average Individual" set is representative of the population average exposure and dietary habits, and should be used for most population dose calculations. The "Maximum Individual" set provides upper bound parameters you may override. All default parameters may be overridden; however, they provide an adequate basis for most generic calculations.

If you find that you are regularly resetting particular parameters, you may revise the default parameter file by editing the PARAMS.DAT file accessed by APPRENTICE. The format of this file is described in Section 2.3.

Note: Only the first column of each of these lines 5, 6, and 7 is read, as a True or False logical variable. The remainder of the line is information to allow ease of editing and is not read by the ENVIN program. Similar structure is true of all the remaining lines of the GENII.IN file, i.e., only the fields necessary to transmit information are read.

Lines 9 and 10: Spacing and header lines for transport and exposure pathway options.

Line 11, Column 1: Atmospheric transport flag, AIR. In most calculations, the known quantity is generally the release quantity. This may take the form of activity, or activity per unit time, released into the transport media of air or surface water, or in the case of buried waste, into soil via waste package degradation and biotic transport. These are converted via appropriate models to concentrations in the corresponding media. The transport flags of lines 11 through 14 indicate which models are to be activated.

Line 12, Column 1: Surface water transport flag, SWAT.

Line 13, Column 1: Biotic transport flag (only activated for near-field scenarios with subsurface contamination), BIOT.

Line 14, Column 1: Waste form degradation flag (only activated for near-field scenarios with buried wastes), BURWAS.

Line 15, Column 1: A blank field.

Line 16, Column 1: The Report Options header.

Line 17, Column 1: Flag for type of dose calculation, OUTEDE. Various levels of detail are available in the output report. The Annual Effective Dose Equivalent (AEDE) is the committed dose from one year of exposure (Volume 1, Figure 3.2). If this option is not selected, cumulative doses (Volume 1, Figure 3.3 or 3.4) from continued exposure (for the number of years you specify in the TIMES menu) will also be calculated and reported. Additional information can be requested on AEDE and cumulative dose-by-radionuclide or dose-by-exposure-pathway as

controlled by the flags on lines 18 and 19. Note that all of these options result in an increased number of pages of output.

Line 18, Column 1: Flag to provide report of exposure by radionuclide, OUTRAD.

Line 19, Column 1: Flag to provide report of exposure by pathway, OUTPTH.

Line 20, Column 1: Flag to provide debugging output, DEBUG. For users interested in the intermediate workings of the code, selected information can be displayed on the screen during calculations. This information is cryptic, fast-scrolling, and slows the calculations. Interpretation requires use of the code listings provided in Volume 3 of this PNL-6584 series.

Line 11, Column 2: Flag to activate finite plume external exposure pathway, FINITE. The potential routes through which people may be exposed to radionuclides or radiation are called "exposure pathways." The general pathways can be thought of as external exposure, inhalation, and ingestion. The flags in Column 2 of lines 11 through 20 control the pathways for which results are calculated. The pathways are chosen depending on the ways people can be exposed for a given circumstance. In this way, an appropriate collection of defined pathways can also be considered to be a definition of an "exposure scenario." Because the types of exposure must be conceptualized before the pathways can be fully defined, "scenarios" are usually defined before the parameters are selected for the "pathways."

Note that either the flag on line 11 or on line 12 can be true, but not both simultaneously. Also, note that the flag on line 11 can be true only if joint frequency data is to be input (the flag on the last line of the atmospheric transport options, described below).

Line 12, Column 2: Infinite plume external exposure flag, AIREXT.

Line 13, Column 2: Soil exposure external exposure flag, GROUND.

Line 14, Column 2: Aquatic recreation (swimming, boating, shoreline) exposure flag, RECRE.

Line 15, Column 2: Inhalation exposure flag, INHAL.

Line 16, Column 2: Drinking water ingestion exposure flag, DRINK.

Line 17, Column 2: Aquatic foods ingestion exposure flag, AQFOOD.

Line 18, Column 2: Terrestrial foods (crops) ingestion exposure flag, TFOOD.

Line 19, Column 2: Animal product (meat, milk, eggs) ingestion exposure flag, ANFOOD.

Line 20, Column 2: Inadvertent soil ingestion model exposure flag, SLING.

Line 21 to 23: Inventory editing header.

Line 24: Selection of radionuclide inventory activity units, IUNIT. GENII requires information on the source of radioactivity in order to continue. You have the option of using either SI units or the various multiples of conventional units. Note that if you are entering source term information for more than one environmental medium, the units used must be consistent within a single case.

Line 25: Selection of surface soil inventory units - the source may be entered in terms of area, volume, or mass, SOLUNT.

Line 26: Reserved line for future development work.

Lines 27 through 34: Inventory editing headers. "Release Terms" are sources to air or water or concentrations in buried wastes. "Basic Concentrations" may be calculated from the release terms, or if known may be entered and the transport steps omitted from the calculations. "Derived Concentrations," if known, may be entered and both the transport and environmental pathway calculations bypassed.

Lines 35 to 35+N: Inventories of radionuclides may be entered here for release or basic concentrations. If derived concentrations are to be used, line 35 may be left blank. Units are as defined on lines 24 and 25. Note that these are formatted reads; therefore the entries must be within the fields defined by the editing headers.

Lines 36+N to 42+N: Derived concentration editing header.

Lines 43+N to 43+M: Inventories of derived concentrations of radionuclides may be entered here. If only release terms and/or basic concentrations

are to be used, line 43+N may be left blank. Again, these are formatted reads that must fall within the limits defined by the editing headers.

Lines 44+M to 45+M: Time editing header. The time step available for GENII simulations is integer-years. Within this constraint, scenarios may be constructed by defining the length of time a person is exposed (intake ends), the period for which the dose commitment is calculated (dose calculation ends), the length of time during which the individual(s) is/are exposed that the active radionuclide release continues, and the length of time before the beginning of the exposure that deposition via air or water occurred (for determining soil accumulation). Refer to Figure 3.1 for definition of the various time adjustments available.

Line 46+M: Length of time over which the intake occurs (time from "Intake Begins" to "Intake Ends" in Figure 3.1), NTKEND, yr. If the AEDE ONLY option has been selected for the reports, only one year will be used.

Line 47+M: Length of time over which dose calculation is integrated (time from "Intake Begins" to "Dose Calculation Ends" in Figure 3.1), DCEND, yr.

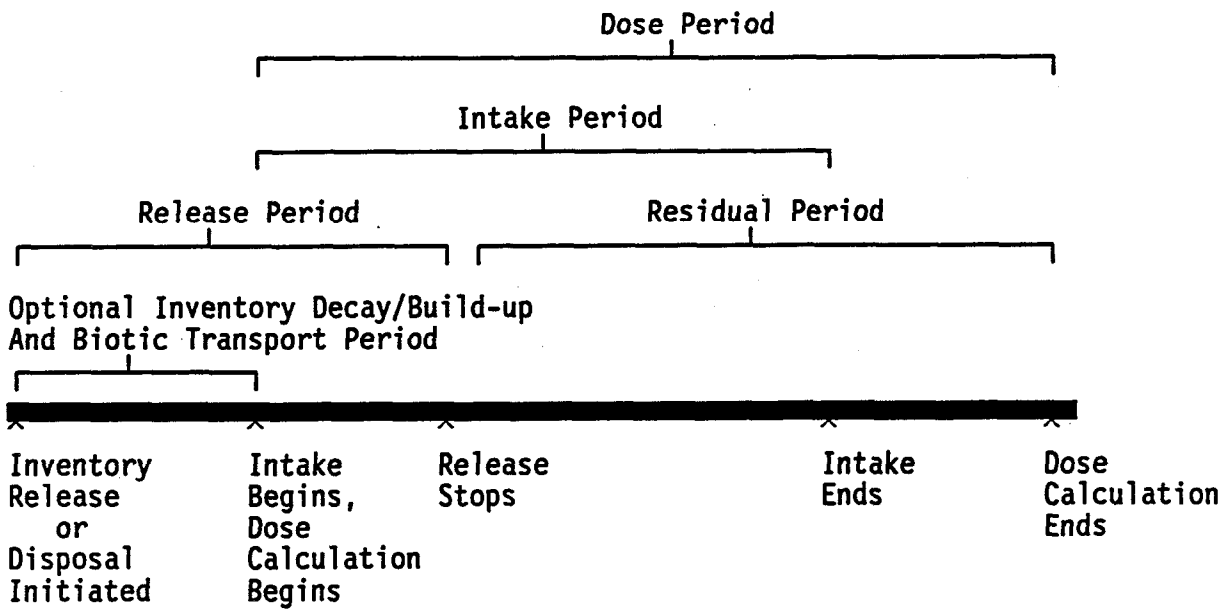

FIGURE 3.1. Time Line for Periods from Release of Radioactive Material Through Completion of Dose Calculations

Line 48+M: Length of time over which release occurs during exposure (time from "Intake Begins" to "Release Stops" in Figure 3.1), RELEND, yr. If the AEDE ONLY option has been selected for the reports, only one year will be used.

Line 49+M: Length of time prior to time "Intake Begins" that inventory atmospheric release was initiated (the early portion of the "Release Period" of Figure 3.1), BEFAIR, yr.

Line 50+M: Length of time prior to time "Intake Begins" that inventory surface water release and irrigation were initiated (the early portion of the "Release Period" of Figure 3.1), BEFIRR, yr.

Lines 51+M to 53+M: Far-field scenario parameter editing header.

Line 54+M: To calculate population doses, you will be asked to input consumption/exposure parameters for an average individual in the population. GENII will then use these average parameters times the number of people to calculate collective dose. The code can either figure a total population for you by summing from a grid that you must provide through input buffer POP.IN, or you can simply enter the total. This line defines whether the grid or the total will be used, POPOPT.

Line 55+M: If only the total population is being used, enter it on this line, POPIN, persons.

Line 56+M to 59+M: Near-field scenario editing header. If you have selected "Buried Waste or Deep Soil" as a source, radioactive decay of the source from the quantity initially disposed and release from waste packages to soil can be calculated by entering the appropriate decay time in the following lines. If "Buried Waste Transport" has been requested, the length of time that the biota have had contact with the waste (assumed to start at the time of loss of institutional control) can be entered.

Line 60+M: The length of time prior to the time "Intake Begins" that the inventory "Disposal" was initiated (refer to Figure 3.1), BEFORE, yr.

Line 61+M: The length of time prior to the time that "Intake Begins" that Loss of Institutional Control (LOIC) occurred, allowing biotic transport to begin, LOIC, yr.

Line 62+M: A two-compartment model of plant roots is allowed: vegetation uptake is assumed to be proportional to the fraction of roots contacting 1) the mixed surface soil layer and 2) the layer of contaminated buried soil. (These two layers can be separated by a third, clean layer.) These root fractions are used in the regular plant concentration model, the harvest removal model, and the plant portion of the biotic transport model. The upper soil fraction is entered on this line, RF1.

Line 63+M: The deep soil root fraction is entered on this line, RF2.

Line 64+M: For scenarios involving physical disruption that mixes deeply buried waste (in ci/m^3) with surface soil (in Ci/m^2), a "Manual Redistribution" factor is available, MANULR. (A handy factor to remember is that throughout GENII, 1 Ci/m^3 = 0.15 Ci/m^2.)

Line 65+M: A simple geometric model of dose rate reduction for small surface areas is provided. Enter the area of the contaminated surface on this line in square meters, FRSIZ.

Lines 66+M to 67+M: Transport editing header.

Line 68+M, Column 1: Blank field.

Line 69+M, Column 1: A number of options are available to determine air concentrations from releases. These may be based on several levels of knowledge. The user may either input a chi/Q value or request that one be calculated. When a chi/q value is input, no decay correction is made by GENII. The user should calculate a decay correction for each radionuclide (if transit time is known) and the input release term reduced accordingly.

In the chronic individual calculation, three options of increasing complexity are available to determine the annual average atmospheric dispersion values:

- The simplest for GENII is to directly input a precalculated chi/Q, in sec/m^3. XOQOPT = 1.
- The next in complexity is when the user specifies the location of the individual, in terms of distance and direction from the source, and asks GENII to compute the chi/Q for that location. This option

requires that the user also have available one of two data sets: either a grid of precalculated chi/Q values or a set of joint frequency data for the source location. (See Section 2.3 for the format of these external data files.) If you choose to use the joint frequency data option, you must also enter data on the characteristics of the source, including whether or not release is elevated or ground level, and whether or not plume rise is calculated. XOQOPT = 3.

- Finally, if either a chi/Q grid or joint frequency file is available, you may instead direct GENII to search and find (select) the location of the maximally exposed individual via the air pathway. These options require data as described above for the specific individual, plus they require a population grid so that GENII does not assume an individual location where nobody lives. XOQOPT = 2.

In the chronic population calculation, three options of increasing complexity are available to determine the annual average atmospheric dispersion values.

The simplest for GENII is to directly input a precalculated population-weighted chi/Q value, in person-sec/m^3. XOQOPT = 1.

The next in complexity is where the user provides both a grid of precalculated chi/Q values and a matching grid of population, and allows GENII to cross-multiply the two to create a population-weighted chi/Q. XOQOPT = 0.

The third option requires the user to supply a joint frequency distribution in place of the chi/Q grid, and to allow the code to create the chi/Q grid. (See Section 2.3 for the format of the chi/Q and joint frequency files.) If you choose to use the joint frequency input option, you must also enter data on the characteristics of the source, including whether or not release is elevated or ground level and whether or not plume rise is calculated. XOQOPT = 0.

Note that you cannot request the "FINITE PLUME" submersion model without using one of the joint frequency options.

To determine the time-integrated air concentration for the acute individual exposure, two options are available.

The first is through input of a precalculated E/Q, in sec/m^3. XOQOPT = 1.

The second is to specify the distance and direction of the individual from the release point. This option requires that the user provide either a grid of precalculated E/Q values or a set of joint frequency data for the source location. (See Section 2.3 for the format of these external files.) If you choose to use the joint frequency option, the code will calculate the E/Q which is not exceeded more than 5% of the time for the specified location (i.e., the 95th percentile E/Q). For this option you must enter data on the source characteristics (including whether or not it is an elevated or ground-level release, whether or not to use the plume rise model, or whether or not to use the building wake model). XOQOPT = 3.

Note that you cannot request the "FINITE PLUME" submersion model without using one of the joint frequency options.

Two options are available for determining the population-weighted, time-integrated air concentration for acute population exposures.

The simplest is through user input of a precalculated population-weighted E/Q, in person-sec/m^3. XOQOPT = 1.

The second option is to specify the direction from the source for which the calculation is desired. This option requires that the user provide either a grid of precalculated E/Q values or a set of joint frequency data for the source location (see Section 2.3 for the format of these external files), and in addition a population grid file. If you choose the joint frequency option, the code will calculate the population-weighted E/Q which is not exceeded more than 5% of the time for the specified direction (i.e., the 95th percentile population-weighted E/Q). For this option you must enter data on the source characteristics (including whether or not it is an elevated or ground-level release, whether or not to use

the plume rise model, and whether or not to consider the building wake model). XOQOPT = 3.

Note that you cannot request the "FINITE PLUME" submersion model without using one of the joint frequency options.

Line 70+M to 71+M, Column 1: Blank Fields.

Line 72+M, Column 1: Input chi/Q or population-weighted chi/Q, if used, goes on this line, XOQI, sec/m^3 or person-sec/m^3.

Line 73+M, Column 1: Sector index for the location of the Maximum Individual, MIDIR. The sector indices are:

1-S	5-W	9-N	13-E
2-SSW	6-WNW	10-NNE	14-ESE
3-SW	7-NW	11-NE	15-SE
4-WSW	8-NNW	12-ENE	16-SSE

Line 74+M, Column 1: Distance of Maximum Individual from the release point, meters, MIDIST.

Line 75+M, Column 1: Flag for use of joint frequency data, as defined by XOQOPT, JFIN.

Line 68+M, Column 2: Identifier for type of atmospheric release, IRELES. The key is:

0 - Ground-level, open area
1 - Elevated stack greater than 2.5 times the height of the nearest building
2 - Elevated building vent
3 - Building vent below roof level

Line 69+M, Column 2: Flag for use of effective stack height (rather than calculate plume rise, STACK.

Line 70+M, Column 2: Stack height or effective stack height, SHITE, m.

Line 71+M, Column 2: Stack flow rate (for plume rise), SFLOW, m3/s.

Line 72+M, Column 2: Stack radius (for plume rise), SRAD, m.

Line 73+M, Column 2: Effluent temperature (for plume rise), ETEMP, degree C.

Line 74+M, Column 2: Building cross-sectional area (for building wake model), BUILDX, m^2.

Line 75+M, Column 2: Building height (for building wake model), BUILDH, m.

Line 76+M to 77+M: Surface Water Transport editing header. Three options are available to determine the surface water concentrations from chronic releases - a simple dilution volume model and more complex models of river and lake dispersion. The dilution volume model requires only input of the annual average flow of the receiving water body (i.e., river) and allows adjustment by a multiplicative input mixing ratio. The river and lake models generate mixing ratios and, from them, water concentrations as functions of flow velocity, water depth, effluent discharge rate, longshore and offshore distance, and other parameters.

Because of the nature of the acute model for surface water transport, only one model is available to determine time-integrated water concentrations. Required input is the average flow of the receiving water body and a multiplicative mixing ratio (usually 1.0 unless otherwise known). The entire source is assumed to be carried off by the river/lake flow.

Line 78+M: Indicator for which mixing ratio model to use. MIXFLG. Key is:

0 - Use input value on next line
1 - Calculate using the river model
2 - Calculate using the lake model

Line 79+M: Input mixing ratio for MIXFLG = 0, MIXR.

Line 80+M: Average river flow rate, SWFLOW. For MIXFLG = 0, the units are m^3/s; for MIXFLG = 1 or 2, the units are m/s.

Line 81+M: Transit time to irrigation withdrawal location, SWTT, h.

Line 82+M: Blank field.

Line 83+M: Rate of effluent discharge to receiving lake or river, SWQB, m^3/s.

Line 84+M: Longshore (downstream) distance from release point to withdrawal location, SWLSX, m.

Line 85+M: Offshore distance from the release point to the inlet location, SWOSY, m.

Line 86+M: Average water depth of receiving lake or river, SWDPTH, m.

Line 87+M: Average river width (for MIXFLG = 1 only), SWIDTH, m.

Line 88+M: Depth of effluent discharge point (in lake model only), SWDZ, m.

Lines 89+M to 90+M: Waste Form Availability editing header.

Line 91+M: Waste form or waste package half-life. "Buried Waste" acts as an additional soil compartment that feeds "Deep Soil" at a rate determined by the waste decomposition half-life. PACKHL, yr.

Line 92+M: Waste thickness. For near-field scenarios involving either "Buried Waste" or "Deep Soil", an estimate of the thickness of the contaminated zone is required for the harvest removal model. WASDEP, m.

Line 93+M: Depth of soil overburden. The depth to the top of this zone is required by the animal portion of the model of soil the animals might move. OVRBRD, m.

Lines 94+M to 95+M: Biotic Transport editing header.

Line 96+M: Flag for activating biotic transport during the period before exposure (refer to Figure 3.1). BTPRE.

Line 97+M: Flag for activating biotic transport during the intake period (refer to Figure 3.1). BTNTK.

Line 98+M: Index for the site conditions before the assumed exposure, BTDSET. Biotic transport may result in radionuclides reaching surface soil from "Buried Waste" or "Deep Soil" both during the period following waste disposal and loss of institutional control but before the initial time of human exposure via this scenario (the "Years since LOIC"). Biotic transport may also continue during the exposure period. Three possibilities are provided for the conditions existing at the site before the start of this scenario's exposure: arid non-agricultural uses, humid non-agricultural uses, or agricultural uses. The parameters that describe these conditions are simplifications of those used in McKenzie et al. (1982 and 1983).

Line 99+M to 104+M: Exposure editing header. The "EXTERNAL EXPOSURE" parameters help define the time during which the individuals or populations

are exposed to sources of direct radiation from contaminated air, soil, water, or sediments. GENII uses fairly simple exposure geometries - shielding corrections for buildings, etc. are not included. If desired, simple reductions for shielding may be incorporated by reducing the time assumed for exposure.

For exposure to an acute air concentration, the fraction of time during plume passage that the person(s) is exposed is input. For exposures to soil and sediment following acute deposition, the exposure is modeled as chronic to a decaying source. Note that, if swimming and boating have been selected, certain assumptions have been "hard-wired" into the code for the acute case (100% exposure for maximum individual, 0% exposure for populations); so no inputs are requested.

Line 105+M, Column 1: Length of external exposure per year to chronic atmospheric plumes, HRPLUM, h.

Line 106+M, Column 1: Length of external exposure per year to soil contamination, HRGRD, h.

Line 107+M, Column 1: Length of time spent per year swimming in contaminated water, HRSWIM, h.

Line 108+M, Column 1: Length of time spent by individuals per year boating, HRBOAT, h.

Line 109+M, Column 1: Length of time spent by individuals exposed in shoreline activities, HRSHOR, h.

Line 105+M, Column 2: Flag for activating irrigation of residential soils (to model external exposure to irrigated soil), RESIRR.

Line 106+M, Column 2: Index for source of residential irrigation water, IRRSR, key is 1 - ground water, 2 - surface water.

Line 108+M, Column 2: The application rate of residential irrigation water, RIRR, inches/year.

Line 109+M, Column 2: Application period of residential irrigation, IRTIMR, Months/year.

Line 110+M: Index for type of shoreline at the exposure location, SHRTYP.

Key is : 1 - River shore
2 - Lake shore
3 - Ocean beaches
4 - Tidal basin

Line 111+M: Travel time of water from the release point to the recreational exposure point, RECTT, h.

Line 112+M: For the acute air submersion model, the fraction of total plume travel time that the individual spends in the plume, FRCLOD.

Line 113+M to 114+M: Inhalation editing header. GENII considers two sources for inhalation exposure: plumes from acute or chronic sources and resuspension from soil contamination. Exposure to plumes may be characterized by the time spent at a location within the plume, in hours/year for chronic exposure or fraction of plume passage time for acute releases, as defined in lines 103+m and 110+m above. Two models describing resuspension are available if desired. The Mass Loading model relates the local air concentration to the local soil concentration by assuming that dust in the air has the same concentrations as the soil. The Anspaugh model (Anspaugh 1975) is a time-dependent function relating surface activity to air concentration. GENII uses a fraction of the upper soil compartment to represent the surface activity.

Line 115+M: Hours per year an individual spends exposed to contaminated air from either chronic plumes or from resuspension. HRINH, h.

Line 116+M: Flag for activating resuspension models, IRES. Key is:

0 - No resuspension
1 - Use mass loading model
2 - Use Anspaugh (1975) model

Line 117+M: If IRES = 1, the mass loading factor XMLF, g/m^3. If IRES = 2, the depth of the top layer of soil that is available for resuspension AVALSL, cm.

Line 118+M to 119+M: Ingestion Population editing header. A common assumption in the older Hanford environmental codes was that food crops are produced and eaten where the people live. While not a bad assumption

for individuals, this can lead to inaccuracies when the people live on one side of a source and the crops are grown on the other, or when not enough food is grown to support the entire population. GENII allows several options, of increasing complexity, to deal with food production.

The user may input a precalculated normalized food-production-weighted chi/Q value (option 0), analogous to a population-weighted chi/Q.

You may select to use the same distribution as used for the population, essentially assuming that the field and people are co-located (option 1).

If you know how much food is produced but not necessarily where, you may assume the crops are grown uniformly throughout the 80-km grid (option 2).

Finally, if you know the actual food production distribution, prepared as a file of values in kg/yr for each of the 10 x 16 grid points for each food type, this may be used with the chi/Q grid input or calculated for the population (option 3).

Note that with options 2 and 3, the potential for doses to people outside the region resulting from crop export may be considered, if desired.

Note: Only the option assuming co-location of crops and population (option 1) is currently available for acute releases. Model development for the other options is as yet incomplete.

Line 120+M: Option selection for food production, FOQOPT.

LINE 121+M: If FOQOPT = 0, then the food-weighted chi/Q is entered on this line, FOQ, kg-sec/m^3.

Line 122+M to 124+M: Editing information.

Line 125+M: The number of people ingesting the aquatic food harvest, AQUPOP, persons, if different than the total population. If a zero is entered on this line, the total population is assumed to eat aquatic foods. If you know the total consumption values (for instance, 100,000 kg of vegetables) and don't really care about how many people it feeds, put in a population of 1 and enter the other values later when required.

Line 126+M: The number of people drinking water from the contaminated source, DWPOP, persons, if different than the total population. If a zero is entered on this line, the total population is assumed to drink from the source.

Line 127+M: An option is available to consider the total production of foods in the assessment area. If not enough food is grown to support the population at the level of consumption indicated, a correction is made. Also, if more food is grown than can be consumed, an effective population can be developed to consider export from the region. The flag for this option is on this line, EXPORT.

Line 128+M to 132+M: Aquatic Food/Drinking Water editing header.

Line 133+M: Flag for consideration of freshwater or marine bioaccumulation factors for the aquatic food pathways, ISALT.

Line 134+M to 138+M: Aquatic Food/Drinking water editing header.

Line 139+M to 142+M, Columns 1 to 5: For each of the aquatic food types you select with the flag in the first column (AQF), several parameters must be entered. These include travel time of the radionuclides in the water to the point where the fish/etc. are caught (AQUTT), h, and the time between harvest and consumption (HLDUP2), day. These allow for proper accounting of decay for short-lived nuclides. Individual aquatic food consumption rates are also input here (USAG), kg/yr. In addition, if the export flag is on, the total production of aquatic food products may be entered (TPRODQ), kg/yr. Note that this is a formatted read, so the values entered must line up in the fields defined by the editing header.

Line 139+M to 142+M, Column 6: Because GENII allows simultaneous consideration of several sources of contamination (surface water and ground water), you need to indicate which source is to be used for drinking on Line 139+M, DWSRC. The key for the sources is:

0 - None
1 - Ground water
2 - Surface water
3 - Derived concentration from lines 42+N to 42+M

You will also need to indicate on Line 140+M whether the drinking water is treated through a water treatment facility (DWTRET). If so, reductions in concentration for filtration/cleanup will be calculated. The travel time of the water through the distribution system is also input on Line 141+M , HOLDDW, days, to allow calculation of decay of short-lived nuclides. Consumption of drinking water, (DWUSAG, L/yr), is input on Line 142+M.

Line 143+M to 149+M: Terrestrial Food editing header.

Line 150+M to 153+M: Input of terrestrial food parameters. For each of the terrestrial food types you select (flag TFD), several parameters must be entered. These help define the conditions under which the crops are grown, such as the length of the growing season (GRWP, days), the conditions of irrigation (source flag IRRST: irrigation rate RIRR, inches/year; irrigation period IRTIMT, months/year), and the yield of the crop (YELD, kg/m^2) as well as the total production, if required (TPRODT, kg/year). Individual food holdup times between harvest and storage (HLDUP, days) and consumption rates (CONS, kg/year) are also input here. Note that this is a formatted read, all input parameters must conform to the fields defined by the editing headers.

Note: Growing time is only used for the years after the release in acute cases. If you are only looking at dose commitment from the first year of exposure, whatever value you enter will be ignored.

Line 154+M to 161+M: Animal Product editing header.

Line 162+M to 165+M: For each of the animal products you may select (flag ANF), several parameters must be entered to define the conditions under which the products are produced. This includes not only the amount of each product consumed by humans (CONS2, kg/yr) and its holdup time (HLDUPA, days), but also the conditions for the foods that the animals themselves eat. The total production of each food type in the assessment area may be entered if required (TPRODA, kg/yr). The fraction of the drinking water that the animals consume (DWFACA) from contaminated sources is entered. Some animals are allowed two food sources (fresh forage and stored feed), so information on stored fraction (DIETFR),

growing period (GRWPA, days), irrigation sources (IRRSA), rates (RIRRA, inches/year), times (IRTIMA, months/year), yields (YELDA, kg/m^2), and storage times (STORTM, days) must be provided for crops eaten by the animals. This information is entered on these lines for the stored feed. Note that these are formatted reads, and the information must fit in the fields defined by the editing headers.

Line 166+M: Fresh Forage editing header.

Line 167+M to 168+M: Some animals are allowed two food sources (fresh forage and stored feed), so information on diet fraction (DIETFR), growing period (GRWPA, days), irrigation sources (IRRSA), rates (RIRRA, inches/year), times (IRTIMA, months/year), yields (YELDA, kg/m^2), and storage times (STORTM, days) must be provided for the crops the animals eat. These are entered on these lines for the fresh forage eaten by beef and milk cattle. Note that these are formatted reads, and the information must fit in the fields defined by the editing headers.

Line 169+M to 170+M: File delineation header.

3.3 EXTDF

EXTDF is a streamlined and updated version of the radionuclide shielding code ISOSHLD (Engle 1966). The input to the code is supplied through an ASCII text file designated EXTDF.IN. This section describes the format for the EXTDF input file. The input is subdivided into three portions, following the original ISOSHLD convention: a title, NAMELIST, and shield specification.

3.3.1 Title

The initial input line is a Case Title, which is read and copied verbatim on the output of the code. Use this line as a unique identifier for the calculation being performed.

3.3.2 NAMELIST

The second input grouping is the NAMELIST input. NAMELIST is a useful FORTRAN specification allowing selective input of variables. NAMELIST variables have default values (i.e., the program assigns a value to the variable

if the user does not specify a value in the input.) A principle advantage of the NAMELIST format is that values for which the defaults are acceptable, or which are not used in a particular calculation, need not be initialized. All of the NAMELIST variables that EXTDF accepts as input are defined below, along with their default values. The NAMELIST variables are grouped into four categories: source distribution, geometry, shielding, and integration.

In the NAMELIST the variable name is written out, followed by an equal sign and the numeric value assigned to that variable. NAMELISTs begin and end with the character "&" and in EXTDF are identified by the word "INPUT" immediately following the first "&". The last "&" must be preceded by a blank space. All lines in a NAMELIST field must begin with a blank space. NAMELIST entries are separated by commas. Array values may be input independently of the value of other array entries, as long as the variable name includes the array position.

A NAMELIST parameter, IEXTU, has been added for specifying input/output units. A unit input of 1.0 is automatically defined for each radionuclide. The following values of IEXTU and their corresponding units are as follows:

0	- rem/h per Ci/cm3	(ISOSHLD default)
1	- mrem/h per Ci/m3	(MAXI1)
2	- mrem/yr per μCi/cm3	(Kocher)
3	- person Sv/yr per Bq/m3	(GENII air)
4	- person Sv/yr per Bq/L	(GENII on water surface)
5	- mrem/yr per μCi/cm2	(Kocher)
6	- person Sv/yr per Bq/m2	(GENII ground)
7	- mrem/yr per pCi/m3	(IMPACTS-BRC ground)

Source Distribution

EXTDF is intended for generating normalized tables of external dose rate factors for various geometries. Therefore, the sources are generally assumed to be unit sources. However, a common input multiplier, WIN, is available. This multiplier can be used to increase or decrease every input radionuclide inventory by a specific amount. The default value is 1.0, a normalized input strength. The radioactive source need not be uniformly distributed within the source material. The variable SSV1 can be used to create an exponential source strength distribution. Legal values are between -10 and +10. If no

value is specified, the program uses zero; i.e., a uniform source distribution. Details on the geometries that allow the use of the SSV1 parameter are given below.

Shielding

The variable NSHLD tells the program how many shields will be used in this problem. A maximum of five is permitted. The program automatically inserts a layer of air as the last shield before the detector (dose point) if the entire distance is not specified as containing shields.

The variable JBUF tells the program which material should be used in computing the build-up factor. If no value is entered, JBUF is automatically set to NSHLD. The common shielding convention is to assign JBUF to the outermost shield (i.e. that closest to the detector) that has at least one relaxation length of material for the energy groups giving the majority of the dose rate. A relaxation length is the inverse of the linear attenuation coefficient. If the outermost shield is not thick enough, then the thickest shield (in terms of relaxation lengths) should be chosen for the build-up factor.

Geometry

The IGEOM variable sets the geometrical shape of the source and shields. Table 3.1 provides the available options.

For each geometry, additional NAMELIST variables specify the dimensions of the source and the distance from the source to the detector. These variables are X, the total distance from the back of the source to the detector; T, the thickness of each of the shield regions; SLTH, the length of the source; Y, the vertical distance from the end of the source to the detector; ANG1, the shield normal angle; and ANG2, the detector angle. All dimensions are in centimeters, all angles are in degrees. Not all of the variables are required for each geometry selection. Definition of these parameters for each geometry is illustrated in the geometry diagrams, Figures 3.2 through 3.12. These diagrams are taken directly from the original ISOSHLD documentation (Engle 1966; Simmonds 1967).

TABLE 3.1. IGEOM Values and Their Relationships to Sources and Shields

IGEOM Value	Source Configuration	Shield Configuration
1	Point	Slab
2	Line	Slab
3	Spherical	Spherical
4	Spherical	Slab
5	Truncated Cone	Slab
5	Infinite Plane	Slab
5	Infinite Slab	Slab
6	Disc	Slab
7	Cylindrical (side)	Cylindrical
8	Cylindrical (side)	Slab
9	Cylindrical (side)	Cylindrical and Slab
10	Cylindrical (end)	Slab
11	Rectangular	Slab
12	Annular Cylinder	Cylindrical and Slab

Integration Variables

The EXTDF solution technique includes a point kernel integration, in which the source is represented as a series of point sources in space and the contribution from each point is calculated and summed to a total dose rate. The number and orientation of the point sources are determined by the integration variables selected by the user. These are NTHETA, NPSI, and DELR. The variables NTHETA and NPSI determine how many intervals the source is divided into. The variable DELR is the thickness of the pieces, in centimeters. Not all of the geometries require specification of these parameters. They are required only for geometries 7 through 12.

The optimal choices for these variables depend on the distance from the source and the geometry. Typically, the best choices are values of NTHETA and NPSI that give volumes that are not much larger than the distance from the face of the source. DELR should be no more than one relaxation length in the source material. When the detector is close to the source, DELR should be less than one-half of a relaxation length.

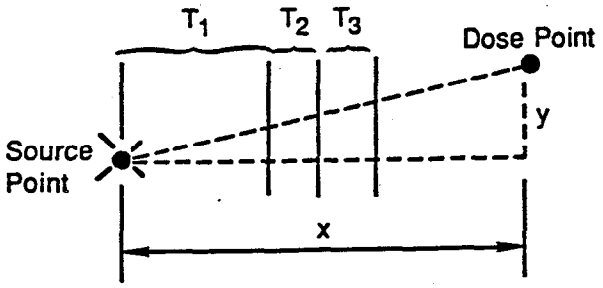

INPUT VARIABLES

T_1, T_2, T_3 = shield thicknesses
IGEOM = 1
X = Perpendicular distance to detector
Y = Parallel distance to detector

FIGURE 3.2. Point Source - Slab Shields

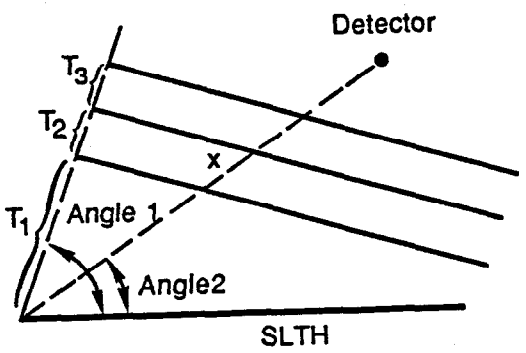

INPUT VARIABLES

IGEOM = 2
X = Distance to detector
Angle 1 = Shield normal angle
Angle 2 = Detector angle
SLTH = Source length
T_1, T_2, T_3 = Shield thicknesses

FIGURE 3.3. Line Source - Slab Shields

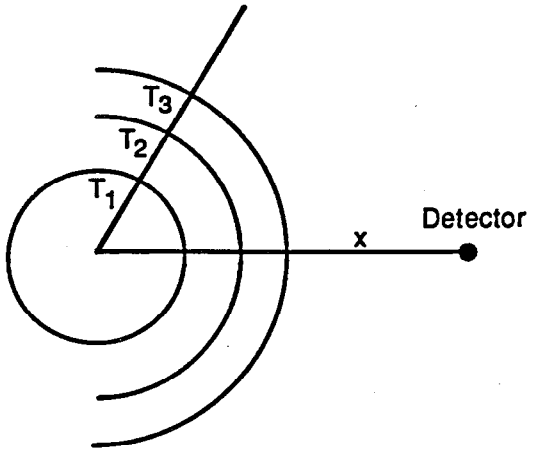

INPUT VARIABLES

IGEOM = 3
X = Distance from center to detector
T_1 = Source radius
T_2, T_3 = Shield radii

Note: Constant source strength distribution only for spherical source

FIGURE 3.4. Spherical Source and Shields

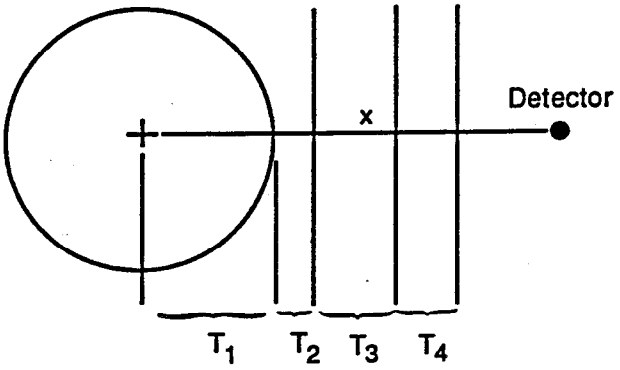

INPUT VARIABLES

IGEOM = 4
X = Distance from center to detector
T_1 = Source radius
T_2, T_3, etc. = shield thicknesses

Note: Constant source strength distribution only for spherical source. Shield region 2 surrounds the source.

FIGURE 3.5. Spherical Source - Slab Shields

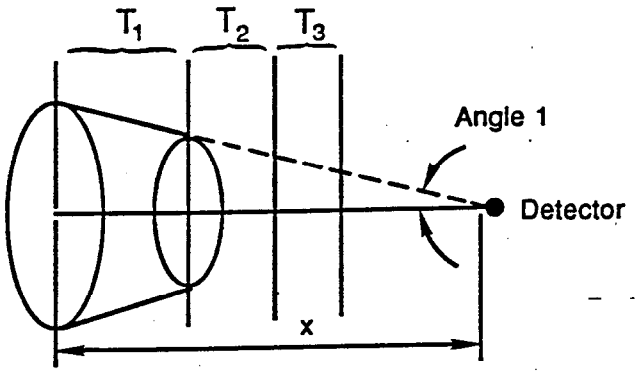

INPUT VARIABLES

IGEOM = 5
Angle 1 = Cone angle
T(1) = Source thickness
X = Distance to detector from opposite face

Notes: If Angle 1 = 90.0° (infinite slab source), then the source strength is input in activity per unit volume.

If T(1) = 0 and Angle 1 = 90.0° (infinite plane source), then the source is input in activity per unit area.

FIGURE 3.6. Truncated Cone Source - Slab Shields

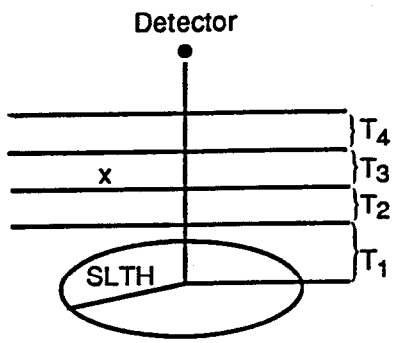

INPUT VARIABLES

IGEOM = 6
SLTH - Disk radius
X = Distance from center to detector

Note: Source strength input is in activity per unit area.

FIGURE 3.7. Disk Source - Detector on Centerline - Slab Shields

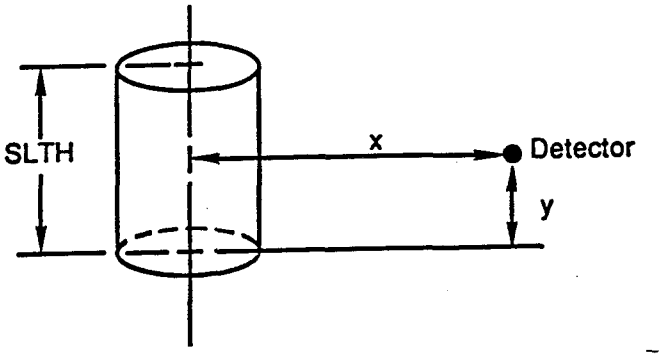

INPUT VARIABLE

IGEOM = 7 for cylindrical shields
IGEOM = 8 for slab shields
SLTH = Length of source
X = Radial distance to detector from centerline of source
Y = Vertical distance from end of source to detector

a. Cylindrical Source, Isometric View.

Note: Y may not be greater than SLTH. (When a value of Y greater than SLTH is entered, the program arbitrarily sets Y = 0.)

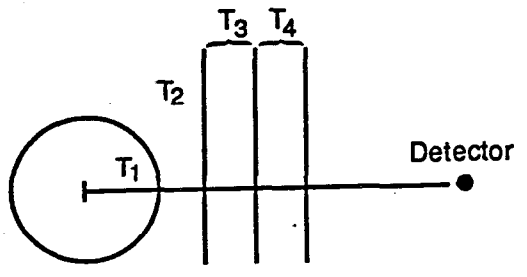

b. Cylindrical Source, End View.

Note: With slab shield, the second shield region surrounds the source.

FIGURE 3.8. Cylindrical Source - Cylindrical and Slab Shields

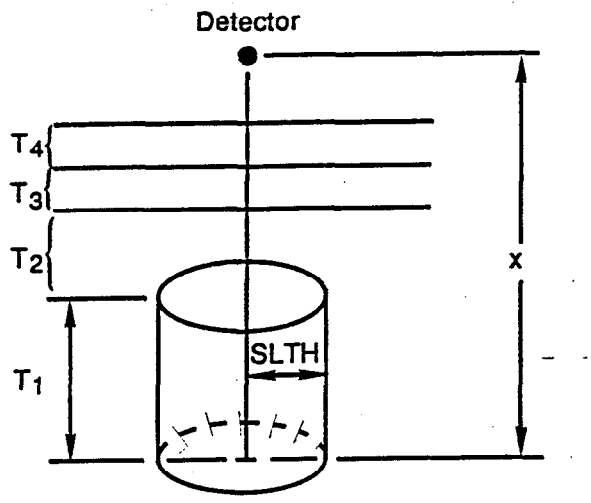

INPUT VARIABLES

IGEOM = 9
SLTH = Radius
T_1 = Cylinder length
X = Distance to detector from opposite end
T_2, T_3, T_4 = Shield thicknesses

FIGURE 3.9. End Cylindrical Source - Detector on Centerline - Slab Shields

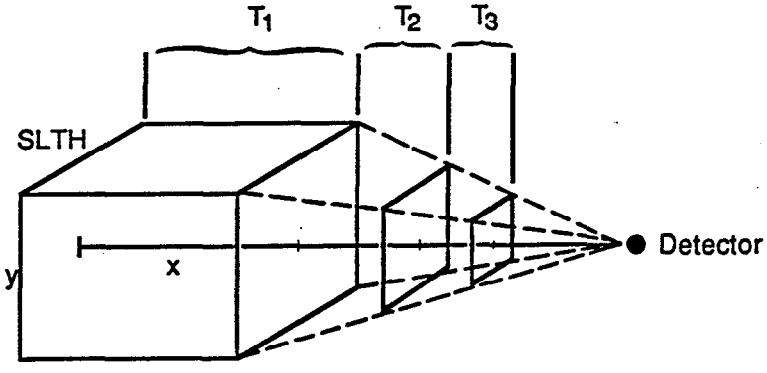

INPUT VARIABLES

IGEOM = 10
X = Distance to detector from opposite fact of source
Y = Height of source
SLTH = Length of source
T_1 = Thickness of source
T_2, T_3 = Shield thicknesses

FIGURE 3.10. Rectangular Source - Detector on Centerline - Slab Shields

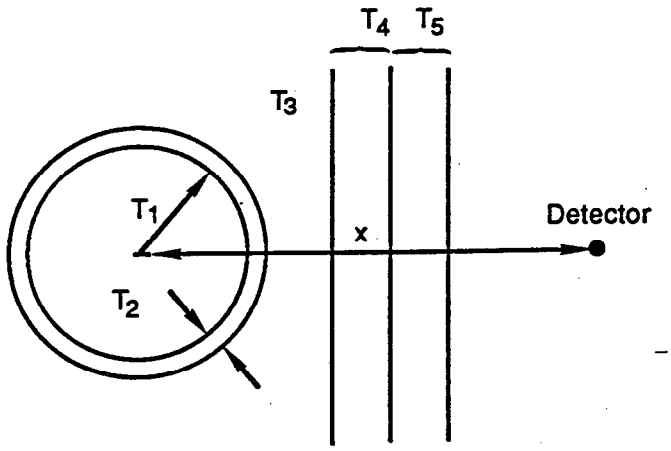

INPUT VARIABLES

IGEOM = 11
SLTH = Length of source
X = Radial distance to detector from centerline of source
Y = Vertical distance from end of source to detector
T_1 = Radius of source
T_2 = Wall thickness of container
T_3 = Distance from container outer wall to first slab shield

a. Plan View

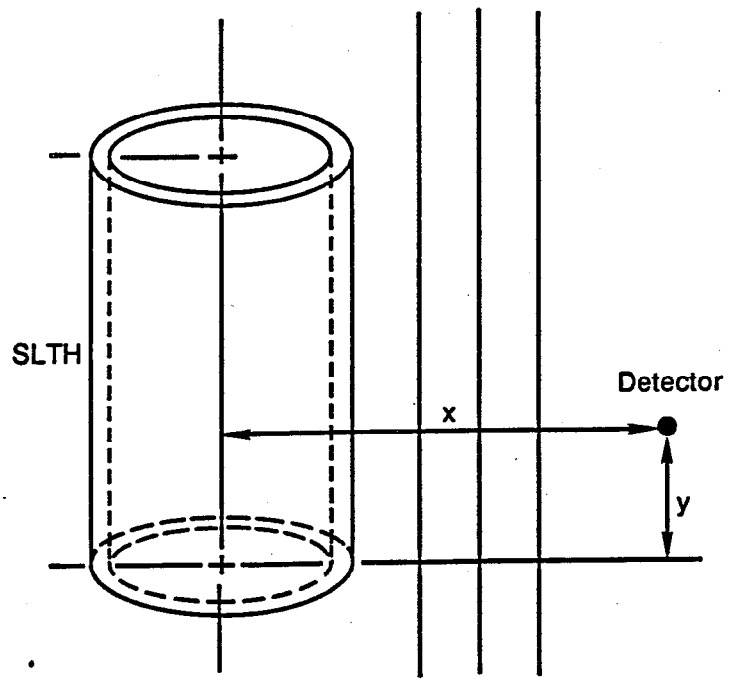

b. Isometric View

Note: Second shield, T(2), is cylindrical. The third shield, T(3), has slab face but surrounds the first and second shields. The remaining shields are slabs. (When a value of Y greater than SLTH is entered, the program arbitrarily sets y = 0.)

FIGURE 3.11. Cylindrical Source - Cylindrical and Slab Shields

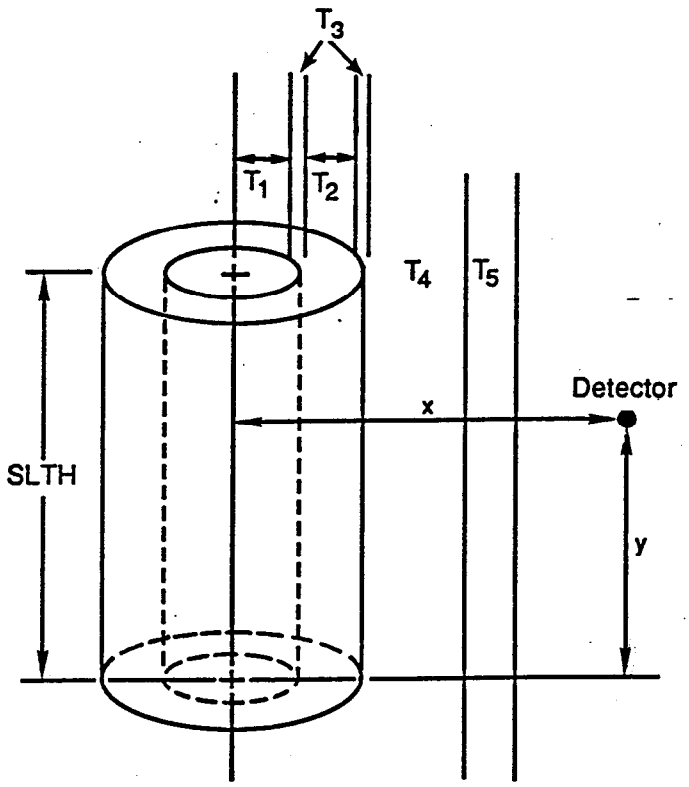

INPUT VARIABLES

IGEOM = 12
T_1 = Inner radius of the annulus
T_2 = Annulus width (source)
T_3 = Container wall thickness
SLTH = Length of source
X = Radial distance to detector from centerline of source
Y = Vertical distance from end of source to detector
T_4, T_5 = Shield thicknesses

Notes: Y may not be greater than SLTH. (When a value of Y greater than SLTH is entered, the program arbitrarily sets Y = 0.)

T_3 is the thickness of the inner and outer walls of the container, which must be equal.

FIGURE 3.12. Annular Cylindrical Source - Cylindrical and Slab Shields

3.3.3 Shield Material Specification

Following the NAMELIST comes the shield specification block. There may be up to five shields, and each shield may be composed of a single material or a mixture of an unlimited number of materials (up to all 20 available materials). For alloys or homogeneous mixtures of materials, the density of each material as it is found in that shield is used. Data is read in an unformatted format; each line specifies the density, in grams/cm^3, of one material for each of the five shields. Each line must contain a continuation key, the material identification number, and the density of that material in each of the shields. The continuation key is an integer, either zero if there are additional materials to be considered, or a one if this is the last material. The material identification number corresponds to the definitions given in Table 3.2. Note that because the read is free format, zero values must be entered. Thus, one key, one identification number, and five densities will always be on each line.

3.4 INTDF

The INTDF code produces radiation dose factors using the techniques of ICRP 30 (1979a, 1979b, 1980, 1981a, 1981b, 1982a, 1982b). A single run will generate both ingestion and inhalation dose factors. The dose factors are prepared as both dose commitments, by organ for the uptake and integration periods desired, and as annual dose increments. Output from the calculation is summarized on the standard output file INTDF.OUT, the dose commitments are stored in file CDE.OUT, and the dose increments are stored in file CDEINC.OUT. Manipulation of these output files allows the creation of the dose factor files used by the DITTY and DOSE routines.

Input to INTDF is brief. The first line is reserved for a title, which is reproduced on each page of output and in the data summary files. On the following four lines the user indicates:

- the number of years to consider
- whether or not (True/False) the exposure is acute or chronic (i.e., whether the dose factors are being created for the DOSE or DITTY routine)

TABLE 3.2. Shield Material Specifications Available in EXTDF

Identification Number	Material	Usual Specific Gravity	Effective Atomic Number	Effective Atomic Number
1	Water	1.0	4	6
2	Tissue	1.0	4	6
3	Air	0.00129	7	14
4	Hydrogen	0.00008	1	1
5	Lithium	0.532	3	7
6	Carbon	2.0	6	12
7	Aluminum	2.702	13	27
8	Titanium	4.5	22	48
9	Iron	7.8	26	56
10	Nickel	8.90	28	59
11	Zirconium	6.44	40	91
12	Tin	7.3	50	119
13	Tungsten	19.3	74	184
14	Lead	11.35	82	207
15	Uranium	18.75	92	238
16	Ordinary Concrete	2.35	10	19
17	Magnetite Concrete	3.76	12	24
18	Strontium	2.6	38	88
19	Promethium		61	145
20	Cerium		96	245

- particle size in microns, to allow determination of lung deposition from inhalation
- whether or not (True/False) the specific effective energies should be printed in the output file (when set, additional output is printed to the screen during execution, which may be used in tracing the internal calculations).

The remaining lines of the input section consist primarily of instructions to the Livermore Solver for Ordinary Differential Equations (Stiff)

which is embedded in the code (Hindmarsh 1983). It is generally not necessary for the user to modify these parameters for the INTDF application. The values provided in the sample problems have been developed through numerous tests, and have been shown to both result in accurate results and minimize computational time for all radionuclides in the GENII libraries. The LSODES parameters have been left in the input to facilitate research use of the INTDF module. The LSODES control parameters are:

- the relative error tolerance parameter, RTOL,
- the absolute error tolerance parameter, ATOL. RTOL and ATOL are used in the LSODES numerical iteration scheme to control the number of iterations required and maintain accuracy of the integrated result. The solver controls the vector E = E(I) of estimated local errors in the integrated retention vector Y according to an inequality of the form Root-Mean-Square Norm E(I)/EWT(I) < 1.0, where EWT(I) = RTOL * ABS(Y(I)) + ATOL. Values of 10^{-6} for RTOL and 10^{-8} for ATOL have been tested and found adequate.
- the maximum absolute time step size the solver is allowed to take, ASSA. Because annual dose increments are calculated, and the code operates on a time unit of days, this has been set to 365 days.
- the initial time step size that the solver should use, HSTART. A value of 10^{-6} days has been found to accommodate all short transients associated with the radionuclides of interest.
- the maximum number of iterations the solver is allowed to take to reach convergence on any one call, NSC. This prevents the machine from getting into infinite loops if there is an error. A value of 700 is recommended as adequate for the calculations of dose factors.

A final input line relates to a developmental capability planned for INTDF. The capability is not completely developed to calculate radiation dose to the thyroid of a developing fetus as a result of maternal radionuclide intake of iodine, and dose factors for fetal exposures are not included in the dose factor files routinely addressed by the DOSE or DITTY programs.

The fetal dose calculation capability should not be used in other than research applications with this version.

Following the input section, the user enters radionuclides to be considered, up to a maximum of 100. Nuclide names must match the spelling of those in RMDLIB. Be careful to enter a return after the last radionuclide, and do not include any blank lines in the file.

3.5 DITTY

Use of the computer program DITTY requires proper assignment of several data files and careful preparation of an input record file. This section describes preparation of the input record file. This file has been designed to allow efficient use of the computer program with minimum effort by the user in preparing input records. Each execution of DITTY can have an unlimited number of cases. An execution file for DITTY contains the following classes of records:

1. A master radionuclide control list defining any radionuclides considered in this set. Radionuclides considered in any of the cases in the set are based on the interrelationship of several parameters:
   - time of release in relation to time period considered
   - type of release (acute or chronic) and whether that type of release is considered in a particular problem of a set
   - release pathway (airborne or waterborne) and whether that pathway is considered in a particular problem of the set
   - input options for release data; whether release data is read for this case or whether release data is in effect from a previous problem.
2. A group of records for each problem in the set consisting of the following types of records:
   - title for this case (Note: the title for the first case of a set is positioned before the master radionuclide list.)
   - a NAMELIST parameter set
   - air concentration factors, optional

- joint frequency data, optional
- population distribution data (record types 8 and 9), optional
- activity airborne release data, optional
- activity waterborne release data, optional.

The order of the records is determined by control integers as indicated in the input record logic diagram of Figure 3.13. This diagram should be referred to when preparing input records for DITTY. Each record type is discussed in the following sections.

3.5.1 Case Structure Parameters

The first record for each run is a title for the first case as described in Table 3.3.

At the beginning of each run, names of all radionuclides to be considered are read. These names are used to select needed data from library files. The number of names is read followed by the names of the radionuclides. The data record formats are described in Table 3.4. The maximum number of radionuclides allowed is 100. This number includes any unsolicited daughters which will automatically be added to the master list by the program. Addition of daughters is determined by decay chain information in the radionuclide data library (see Section 2.3.1.).

The spelling of the radionuclide name symbols must correspond to the spelling given in the master radionuclide data library, Section 2.3.1.

3.5.2 NAMELIST INPUT Parameters

The data records for the master radionuclide list are read at the beginning of each run. The remaining records are read for each case as determined by input parameters. Control parameters and selected model parameters are read next in a NAMELIST INPUT record set. The first record of this set must begin with INPUT in columns 2-7, and the last record must end with END in any column except column 1. Each parameter is supplied by setting it equal to the desired value. For example, to set the parameter IPATH to 2, enter IPATH = 2 starting after column 8 on the first record. Array values are specified by including the array subscript. For example, to set position 2

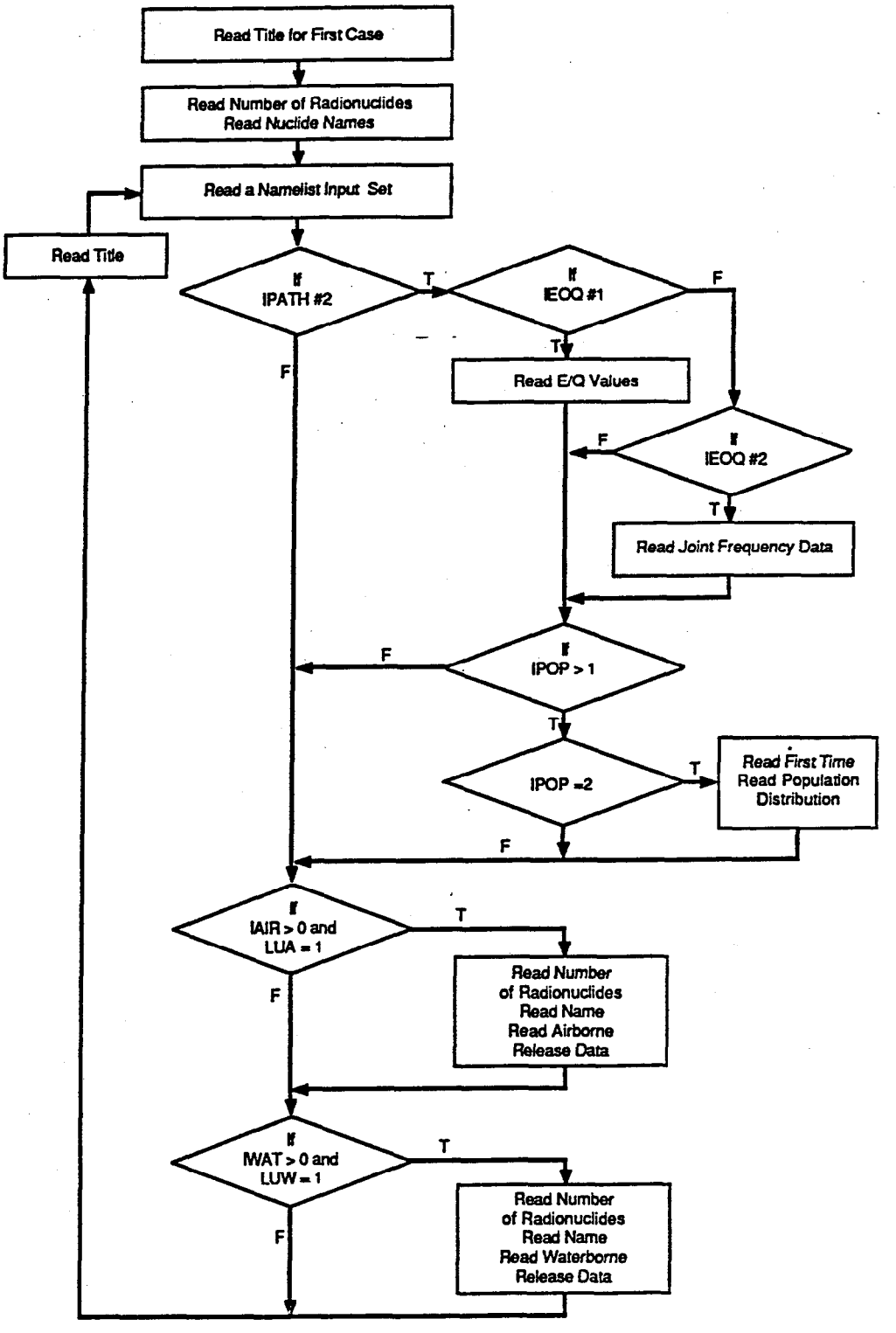

FIGURE 3.13. DITTY Input Logic Diagram

TABLE 3.3. Case Title Format

Variable	Columns	Format	Description
CASTTL(2)	1-80	20A4	Descriptive title for the current run to be printed on output report headings

TABLE 3.4. Master Radionuclide Name Format

Parameter	Columns	Format	Description
NIN	1-5	I5	Number of radionuclide names to be read, $1 \leq NIN \leq 100$ ($1 \leq NIN \leq 25$ for IBM-PC)
E(i)	1-2	A2	Element symbol for a radionuclide.
A(i)	3-8	A6	Atomic weight symbol for the radionuclide

of the array LORG to 6, enter LORG(2) = 6. Each entry must be separated by a comma. The NAMELIST INPUT parameters recognized by "DITTY" are described in Section 3.5.1 by the following categories:

- general control integers
- time references
- site grid description
- atmospheric dispersion
- population description
- waterborne pathways
- terrestrial pathways (for airborne and waterborne releases)
- graphical output selection options.

A. General Control Integers

IAC To consider an acute release period at the beginning of the first 70-yr period, set IAC > 0. Default is IAC = 0.

IAIR This parameter is set positive if airborne release activity data are to be read. Default is IAIR = 0.

IPATH This parameter selects pathways to be considered as follows:

IPATH $\leq$ 0; airborne and waterborne
IPATH = 1; airborne only
IPATH $\geq$ 2; waterborne only

No default value is specified for IPATH.

IREDE This parameter controls printing of detailed reports of dose by radionuclide and by pathway. If IREDE > 0, additional reports are printed.

IWAT This parameter is set positive if waterborne release activity data are to be read. Default is IWAT = 0.

LUA This parameter selects the input logical file unit for reading of airborne release activity data as follows:

LUA = 1; use input file
LUA ≠ 1; use data file buffer AIRREL.IN (see Section 2.2.11)

Default is LUA = 1.

LUW This parameter selects the input logical file unit for reading of waterborne release activity data as follows:

LUW = 1; use input file
LUW ≠ 1; use data file buffer WATREL.IN (see Section 2.2.10)

Default is LUW = 1.

ISALT This parameter determines if fresh or saltwater factors are considered in bioaccumulation factors as follows:

ISALT = 0; freshwater
ISALT = 1; saltwater

Default is ISALT = 0

B. Time Reference Parameters

TZ The beginning of the ten-thousand-year dose period is given by this parameter in years A.D. Default is TZ = 2000.

TZR The beginning of the release history data is given by this parameter in years A.D. TZR is used for both airborne and waterborne release data. Default is TZR = 2000. For acute exposure case, TZR must be equal to TZ.

C. Site Grid Description Parameters

DIST(10) These values represent the distance from the release point to the midpoint of each distance interval, meters. Default values are not specified for DIST.

NDIST This integer gives the number of distance intervals to be considered, $1 \leq NDIST \leq 10$. Default is NDIST = Ø.

NSECT This integer gives the number of sectors to be considered in the calculation of population dispersion factors (PM) and in the atmospheric dispersion calculation. $1 \leq NSECT \leq 16$. Default is NSECT = 16.

D. Atmospheric Dispersion Parameters

IEOQ This integer is used to control reading and calculation of atmospheric dispersion data as follows:

IEOQ $\leq$ 0; use previous data

IEOQ = 1; read normalized air concentrations from data file buffer CHIQ.IN (see Section 2.2.3)

IEOQ = 2; read joint frequency data from data file buffer JOINTFRE.IN (see Section 2.2.2) and calculate normalized air concentration

IEOQ = 3; use previous data to calculate normalized air concentration

IEOQ 3; use previous data.

Default is IEOQ = 0.

HS This parameter gives the effective release height for airborne release. HS is used when normalized air concentrations are to be calculated (IEOQ = 2 or 3). Default is HS = 0.

E. Population Description Parameters

Population Parameters for Chronic Airborne Releases

Population dispersion factors are required for each 70-yr increment of the 10,000 year integration period (143 increments). Six options are provided for generation of the population dispersion factors for chronic airborne releases.

Method One. The first method allows the user to supply all values through input (IPOP = 1).

Method Two. The second method (IPOP = 2) uses an initial population distribution to generate the population dispersion factor for the first time increment. Then the increase in total population is supplied as a function of time and the program increases the population dispersion factor in proportion to the population increase.

The user supplies the initial distribution in the file buffer POP.IN (see Section 2.2.4).

Method Three. The third method (IPOP = 3) uses population distributions at specified times read from file buffer POP.IN (see Section 2.2.4). Population dispersion values are calculated for each specified time. These values are interpolated to determine the population dispersion values for each 70-yr increment.

Method Four. The fourth method (IPOP = 4) allows specification of population dispersion values at specified times. This data is interpolated to determine values for each 70-yr increment.

Method Five. The fifth method (IPOP = 5) uses the previous population distribution data but new $\bar{\chi}/Q'$data to generate the first time value for PM (air) or PL (water).

The second, third, and fifth methods use atmospheric dispersion data ($\bar{\chi}/Q'$ values) as calculated in subroutine EOVRQ or supplied on input.

Method Six. The sixth method (IPOP = 6) indicates that there is no chronic release. Use of this method ensures that population is specified properly for a case with an acute release only.

IPOP This control integer selects the method for determining population dispersion factors for airborne releases as follows:

IPOP $\leq$ 0; use previous value. No additional population input required.

IPOP = 1; supply all 144 values for array PM in NAMELIST INPUT.

IPOP = 2; read population data for the first time, T(1), and calculate PM. Then generate PM for other times from population (PM1) and time (T) data by ratio with initial total population. Supply NAMELIST INPUT parameters NTA, T, and PM1.

IPOP = 3; read population data for each time from file buffer POP.IN and calculate PM for each time.

IPOP = 4; supply population dispersion factors in array PM1 at times T, and interpolate this data to generate PM values for each 70-yr increment. Supply values for NAMELIST INPUT parameters NTA, T, and PM1.

IPOP = 5; use previous population distribution data but recalculate the first time value for PM using new $\bar{\chi}/Q'$data. This method is similar to method 2 except no population data is read. No additional population input required.

IPOP = 6; There will be no chronic release during this case (IPA must be used).

IPOP > 6; not allowed.

Default is IPOP = 4.

NTA — This integer gives the number of times for which airborne population history data are supplied in arrays PM1 and T. $1 \leq NTA \leq 20$. Default is 1.

PM(144) — Population dispersion factor, person-sec/m^3 for airborne releases for each 70-yr period. This is an effective population-weighted $\bar{\chi}/Q'$.

PM1(20) — This array gives population dispersion factor data for airborne releases corresponding to times in array T. This data is used when IPATH $\leq$ 1 and IPA > 1 or when IPOP = 2, 4, or 5. When IPOP = 2, the data represents total population at each time. When IPOP = 4, the data represents population dispersion factors. When IPOP = 5, previous data are used (the form is not important). When IPA > 1, the data represents population dispersion factors unless IPOP = 2, in which case total population values are given. Default values are not specified for PM1.

POPT(2) — This array gives total population for airborne releases at each time given in array T. POPT is used for IPATH $\leq$ 1 and IPOP = 2 or 5. Default is all POPT values set to zero.

T(20) — This array gives times at which population data is supplied for airborne releases. Times are in years A.D. T is used when IPATH $\leq$ 1 and IPOP = 2, 4, or 5 or IPA > 1.

Population Parameters for Acute Airborne Releases

IPA — This control integer indicates the method (see text for discussion of methods) for specifying the population dispersion factor for the acute release period for airborne releases.

IPA $\leq$ 0; use previous values
IPA = 1; use the value given for PMA
IPA = 2; calculate the value for time TZ from calculated time history data; population data for chronic airborne release must be entered if this option is selected.

Default is IPA = 1.

PMA — This parameter is the population dispersion factor for the acute airborne release period used when IAC > 0 and IPA = 1. Default value is PMA = 0.

Population Parameters for Chronic Waterborne Releases

IPOPL This control integer selects the method for determining populations for waterborne release as follows:

IPOPL $\leq$ 0; use previous PL values. No additional population input required.

IPOPL = 1; supply all 144 values for array PL in NAMELIST INPUT.

IPOPL = 2; supply total population value data in arrays PL1 and TL and generate PL values by interpolation. Provide values for NAMELIST INPUT parameters NTL, TL, and PL1.

IPOPL > 2; not allowed.

Default is IPOPL = 2.

NTL This integer gives the number of times for which waterborne population history data are supplied in arrays PL1 and TL. 1 $\leq$ NTL $\leq$ 20. Default is 1.

PL(144) This array gives total population for waterborne pathways for the acute period, PL(1) and each 70-yr period (143). Default is all values set to zero.

PL1(20) This array gives total population for waterborne pathways corresponding to times in array TL. This data is used when IPL > 1 or when IPOPL = 2. Default is all PL1 values set to zero.

TL(20) This array gives time at which population data is supplied for waterborne releases. Times are in years A.D. TL is used when IPATH $\neq$ 1 and either IPL > 1 or IPOPL = 2. Default values for TL are zero.

Population Parameters for Acute Waterborne Releases

IPL This control integer indicates the method for specifying population data for the acute release period for waterborne releases.

IPL $\leq$ 0; use previous values. No additional population required.
IPL = 1; use the value given for PPL
IPL > 1; calculate the value for time TZ from given population time history data. Population data for chronic waterborne release must be entered if this option is set > 1.

PPL This parameter is the total population for the acute waterborne release period used when IAC > 0 and IPL = 1. Default value is PPL = 0.

F. Waterborne Pathway Parameters

CFLO This parameter is used in calculating the dilution of liquid releases. It is the flow rate, in cubic feet per second (cfs), of the water into which the radionuclides are released. A default value is not specified for CFLO.

RECON This parameter is also used in calculating liquid dilution. It is used in particular cases where the inlet to a contamination facility is downstream of the outlet where reconcentration may occur. Default is 1.0.

RM This parameter is used in calculating liquid dilution where the receptor is near the release point. It relates the amount of the river flow actually mixed with the released radionuclides. $0 \leq RM \leq 1$. Default is 1.0.

USAGE(7) This array contains input values of the consumption or exposure rates for the waterborne pathway parameters for individuals:

1. fish consumption, kg/yr
2. crustacea consumption, kg/yr
3. mollusk consumption, kg/yr
4. water plant consumption, kg/yr
5. drinking water consumption, L/yr
6. exposure to contaminated sediments, h/yr
7. swimming in contaminated water, h/yr.

G. Terrestrial Pathway Parameters

CONSUM(7) This array contains values of consumption rates, kg/h, for the terrestrial pathways for individuals:

1. leafy vegetables
2. other vegetables
3. eggs
4. milk
5. beef
6. unused
7. poultry.

EXTIM This parameter relates the average time, h/yr, that an individual spends exposed to surface soils contaminated by either atmospheric or irrigation deposition.

GWRP(7) This growing period (time of foliage above ground) for the 7 crops enumerated under the variable CONSUM. For the animal products, GRWP is the time above ground for feed or forage.

MOPYR This value is the months per year that irrigation is used on crops.

RIRR This parameter is the irrigation rate of the crops under CONSUM. The units in DITTY are L/m^2/month. For the animal products, this is the irrigation rate of the animal forage crops.

YELD(7) This array contains the crop or forage yield, kg/m^2, for the 7 pathways under CONSUM.

H. Graphical Output Control Parameters

Some QA input data and results from DITTY1 calculations are presented as graphical functions of the data versus time. Various parameters may be plotted as described below.

IGRPM This parameter allows plotting of the population weighted $\bar{\chi}/Q'$ (PM) versus time if initialized. Default is IGRPM = 0.

IGRPL This parameter allows plotting of the total population affected by aquatic pathways if nonzero. Default is IGRPL = 0.

IGRTNU This parameter allows plotting of the total radionuclide release rate, in curies per 70-yr period versus time, if nonzero. Default is IGRTNU = 0.

IGRNUC This parameter allows plotting of the release rates of individual radionuclides, curies per 70-yr period, versus time if nonzero. If IGRNUC is equal to zero, a numeric report of release activity is printed for each radionuclide. Default is IGRNUC = 0.

IGRDOS This parameter allows plotting of the dose to each organ versus time in the output if nonzero. Default: IGRDOS = Ø.

3.5.3 Other Input Parameters

The NAMELIST parameter IEOQ controls input of atmospheric dispersion data. When IEOQ = 1, normalized air concentration data (E/Q) are read from file buffer CHIQ.IN (see Section 2.2.3).

When IEOQ = 2, the normalized air concentration values are to be calculated from annual average meteorological data of joint frequency of occurrence of wind speed, atmospheric stability, and wind direction. This data is read from file buffer JOINTFRE.IN (see Section 2.2.2).

When the population control integer IPOP is equal to 2, one set of population distribution data is read from file buffer POP.IN (see Section 2.2.4).

Airborne release data may be included in the input stream (IAIR > and ILUA = 1). One set of records is read for each radionuclide. Reading is

terminated by placing a zero value for parameter NT of the last record of the set. These records are described in Table 3.5.

When waterborne releases are to be included in the input stream (IWAT > 0 and LUW = 1), the data are read as for the airborne release set using the format of Table 3.5.

TABLE 3.5. Radionclide Release Data Format

Parameter	Columns	Format	Description
NNAT	1-5	I5	Number of radionuclides for which activity release data are supplied
E	1-2	A2	Element symbol for the current radionuclide
A	3-8	A6	Atomic weight symbol for the current radionuclide
	9-10	2X	Blank
NT	11-15	I5	Number of times for which release rates will be supplied, NT $\leq$ 300. When NT $\leq$ 0, reading of activity release data is terminated. NT determines the number of data records to be read.
TA(i)	1-10	E10.2	Time at which the current release rate is defined. Years since start of release and based on parameter TZR.
C(i)	11-20	E10.2	Release rate, Ci/yr, for the current radionuclide at time TA(i).

Calculations are performed after input of necessary data. If additional cases are to be considered, the same data formats are used based on new values given for the control parameters in the new NAMELIST set. Each succeeding case starts with input of a title record and a NAMELIST INPUT set.

4.0 SYSTEM REQUIREMENTS

The GENII Software Package will run on an IBM-PC AT or equivalent computer configured with an 80287 math co-processor, 640 kilobytes random-access memory, a minimum of 5 megabytes on-line disk storage, and operating under IBM DOS 3.1 or newer version.

Portions of the GENII Software Package have been tested on a number of IMB-PC/AT compatible machines. Versions of GENII have been established on microcomputers manufactured by GRID, NEC, Hewlett-Packard, and IBM. The IBM machines have included the new PS/2 System 50 and System 80. No machine-based incompatabilities have been found.

The GENII Software System is distributed on either 5.25-inch, 1.2 megabyte disks, or on 3.5-inch, 720 kilobyte disks. An automatic install procedure has been included with the software. To install the GENII Software Package, do the following:

1. Insert the GENII Distribution Disk # 1 in the A: floppy disk drive.
2. Type **A:** and press **Enter**.
3. Type: **INSTALL n:**, where **n** designates the hard disk you wish GENII to be installed on, and press **Enter**.
4. Respond as requested by the install procedure.

The installation procedure will create a subdirectory named GENII on the designated drive and then copy files into that subdirectory.

For the GENII Software Package to function properly, the following commands must be in the **CONFIG.SYS** file in the root directory of the disk drive which is used to boot the system:

```
FILES=20
BUFFERS=24
DEVICE=ANSI.SYS
```

Refer to the IBM DOS reference manual (IBM 1985) for details on installing these commands.

5.0 QUALITY ASSURANCE RELATED TOPICS

The GENII software package was developed in a framework for complying with the requirements of ANSI/ASME NQA-1-1983, Quality Assurance Program Requirements for Nuclear Power Plants, Supplement 3S-1, Supplementary Requirements for Design Control. NQA-1 specifies that for hardware design control, the following shall be addressed:

- design input
- design process, including design analysis
- design verification
- change control
- interface control
- documentation and records.

The QA procedures used during the development of the GENII software package are an interpretation of these hardware requirements for software.

Design input is specified through research project planning documents. This requirement was met through the preparation of the System Design Requirements presented as the Appendix to Volume 1 (Napier et al. 1988a).

The design process consisted of developing and internally testing software, developing test cases, and documenting software in accordance with the design input. The GENII package has been extensively tested and verified by hand, using the hand calculation worksheets of Volume 3 (Napier et al. 1988b), and benchmarked against similar Hanford environmental dosimetry programs. A 10-volume set of test documentation is available for review from the authors upon request. The design process concluded with analysis of the final design by means of a Final Internal Development Review (FIDR). Two external peer reviews were held, as described in Section 1.2 of Volume 1; these constitute the FIDR for the GENII package.

Following the FIDR, the GENII code was placed under configuration management. Through this management, all changes and versions have been controlled and documented. Change control has been instituted; only authorized and approved changes can be made to the working versions. A list of users is maintained, and revisions are distributed to this list when necessary.

Additional volumes of change documentation records are available. This three-volume set contains all necessary documentation of the code, models, and implementation methods for GENII Version 1.359. Further revisions will be documented, and revised documentation will be issued if necessary.

In addition to the development requirements, NQA-1 addresses applications of software. The controlled versions of the code may be obtained from the authors, with sufficient documentation to assure correctness of the proposed application. Users must maintain applications records logs for all applications of the code outside of the Hanford Environmental Dosimetry Upgrade Project.

The GENII Software Package is made up of six programs written in FORTRAN and one written in compiled BASIC. The FORTRAN programs are compiled using the Lahey F77L compiler (Lahey Computer Systems 1986). The BASIC program is distributed in a version compiled with the Microsoft QuickBASIC 3.0 compiler (Microsoft 1987). The BASIC program uses modules and subroutines from the Komputerwerk FINALLY! and FINALLY! Modules libraries (Komputerwerk 1986a, 1986b). The GENII System codes have been developed and tested using these products, and unanticipated problems may occur if other compilers are used.

6.0 REFERENCES

American National Standards Institute/American Society of Mechanical Engineers. 1983. Quality Assurance Program Requirements for Nuclear Power Plants, Supplement 3S-1, Supplementary Requirements for Design Control. NQA-1-1983, American National Standards Institute, New York, New York.

Anspaugh, L. R., J. H. Shinn, P. L. Phelps, and N. C. Kennedy. 1975. "Resuspension and Redistribution of Plutonium in Soils." Health Phys. 29:571-582.

Bateman, H. 1910. "Solution of a System of Differential Equations Occurring in the Theory of Radioactive Transformations." Proc. Cambridge Phil. Soc. 15:423-427.

Engel, R. L., J. Greenborg, and M. M. Hendrickson. 1966. ISOSHLD - A Computer Code for General Purpose Isotope Shielding Analysis. BNWL-236, Pacific Northwest Laboratory, Richland, Washington.

Hindmarsh, A. C. 1983. "Toward A Systemized Collection of ODE Solvers." Scientific Computing, R. S. Stepleman, ed. 10th IMACS World Congress on Systems Simulation and Scientific Computation, North-Holland Publishing Company, Amsterdam, The Netherlands.

International Commission on Radiological Protection (ICRP). 1966. "Deposition and Retention Models for Internal Dosimetry of the Human Respiratory Tract." Health Phys. 12:173.

International Commission on Radiological Protection (ICRP). 1979a. "ICRP Publication 30, Part 1, Limits for Intakes of Radionuclides by Workers." Annals of the ICRP, Vol. 2, No. 3/4. Pergamon Press, New York, New York.

International Commission on Radiological Protection (ICRP). 1979b. "ICRP Publication 30, Supplement to Part 1, Limits for Intakes of Radionuclides by Workers." Annals of the ICRP, Vol. 3, No. 1-4. Pergamon Press, New York, New York.

International Commission on Radiological Protection (ICRP). 1980. "ICRP Publication 30, Part 2, Limits for Intakes of Radionuclides by Workers." Annals of the ICRP, Vol. 4, No. 3/4. Pergamon Press, New York, New York.

International Commission on Radiological Protection (ICRP). 1981a. "ICRP Publication 30, Supplement to Part 2, Limits for Intakes of Radionuclides by Workers." Annals of the ICRP, Vol. 5, No. 1-6. Pergamon Press, New York, New York.

International Commission on Radiological Protection (ICRP). 1981b. "ICRP Publication 30, Part 3 Including Addendum to Parts 1 and 2, Limits for Intakes of Radionuclides by Workers." Annals of the ICRP, Vol. 6, No. 2/3. Pergamon Press, New York, New York.

International Commission on Radiological Protection (ICRP). 1982a. "ICRP Publication 30, Supplement A to Part 3, Limits for Intakes of Radionuclides by Workers." Annals of the ICRP, Vol. 7, No. 1-3. Pergamon Press, New York, New York.

International Commission on Radiological Protection (ICRP). 1982b. "ICRP Publication 30, Supplement B to Part 3 Including Addendum to Supplements to Parts 1 and 2, Limits for Intakes of Radionuclides by Workers." Annals of the ICRP, Vol. 8, No. 1-3. Pergamon Press, New York, New York.

Johnson, J. R., and M. B. Carver. 1981. "A General Model for Use in Internal Dosimetry." Health Phys. _41:341-348.

Johnson, J. R., and R. C. Myers. 1981. "Alkaline Earth Metabolism: A Model Useful in Calculating Organ Burdens, Excretion Rates and Committed Effective Dose Equivalent Conversion Factors." Radiation Protection Dosimetry. 1(2):87-95.

Kocher, D. C. 1981a. Dose-Rate Conversion Factors for External Exposure to Photons and Electrons. NUREG/CR-1918, U. S. Nuclear Regulatory Commission, Washington, D.C.

Komputerwerk. 1986a. FINALLY!, A Subroutine Library for Compiled BASIC, Advanced Version. Komputerwerk, Pittsburgh, Pennsylvania.

Komputerwerk. 1986b. FINALLY! Modules, Programming Modules for Compiled BASIC. Komputerwerk, Pittsburgh, Pennsylvania.

Lahey Computer Suystems, Inc. 1986. F77L Reference Manual. Lahey Computer Syustems, Incline Village, Nevada.

McKenzie, D. H., L. L. Cadwell, L. E. Eberhardt, W. E. Kennedy, Jr., R. A. Peloquin, and M. A. Simmons. 1982. Relevance of Biotic Pathways to the Long-Term Regulation of Nuclear Waste Disposal. NUREG/CR-2675 Vol. 2, U.S. Nuclear Regulatory Commission, Washington, D.C.

McKenzie, D. H., L. L. Cadwell, L. E. Eberhardt, W. E. Kennedy, Jr., R. A. Peloquin, and M. A. Simmons. 1983. Relevance of Biotic Pathways to the Long-Term Regulation of Nuclear Waste Disposal. NUREG/CR-2675 Vol. 3, U.S. Nuclear Regulatory Commission, Washington, D.C.

Microsoft Corporation. 1987. Microsoft QuickBASIC 3.0, Learning and Using Microsoft QuickBASIC. Microsoft Corporation, Redmond, Washington.

Napier, B. A., R. A. Peloquin, and D. L. Strenge. 1986. DITTY - A Computer Program for Calculating Population Dose Integrated Over Ten Thousand Years. PNL-4456, Pacific Northwest Laboratory, Richland, Washington.

Oak Ridge National Laboratory (ORNL). 1981. RSIC Data Library Collection - DRALIST, Radioactive Decay Data for Application to Radiation Dosimetry and Radiological Assessments. DLC-80, Oak Ridge National Laboratory, Oak Ridge, Tennessee.

Rockwell III, T., ed. 1956. Reactor Shielding Design Manual. D. Van Nostrand Company, Inc., New York, New York.

Simmons, G. L., J. J. Regimbal, J. Greenborg, E. L. Kelley, Jr., H. H. Van Tuyl. 1967. ISOSHLD-II: Code Revision to Include Calculation of Dose Rate from Shielded Bremsstrahlung Sources. BNWL-236 SUP 1, Pacific Northwest Laboratory, Richland, Washington.

APPENDIX A

SAMPLE PROBLEM INPUT AND OUTPUT

APPENDIX A

SAMPLE PROBLEM INPUT AND OUTPUT

Example input files and the resultant code outputs are listed in this appendix. Seven sample problems are presented with all required external data files. These seven examples provide a glimpse of the range of capabilities of the GENII package. They are, however, by no means exhaustive, and within the limitations of the printed page they can only be used as indicators of the types of calculations that may be performed using the GENII system. Each sample problem is briefly described, and the salient parts of the output are noted. These sample outputs may be used by persons installing the GENII package to compare it to calculated results to assure that the codes are functioning properly on particular hardware configurations.

A.1 GENII SAMPLE PROBLEM 1

The first sample problem represents a chronic release of a spectrum of radionuclides to the atmosphere through a stack with an effective height of 89 meters. The release is assumed to last for a period of one year, exposures of the public surrounding the release point are assessed for the 1-year release, and a 50-year dose commitment is calculated. Because this is a population dose calculation, an external data file providing the population distribution is needed. The air submersion dose is to be calculated using the finite-plume model. Therefore, an external data file of the joint frequency of occurrence of wind speed, wind direction, and stability class is also required. People are exposed via air submersion, inhalation, direct exposure to deposited materials on the ground, and ingestion of food crops and animal products.

The GENII input file created by APPRENTICE for this scenario is presented as Exhibit A.1. The required population data file, to be copied into the POP.IN file buffer, is presented in Exhibit A.2. The required joint frequency data file, to be copied into the JOINTFRE.IN file buffer, is presented as Exhibit A.3. These are typical working data files similar to those used for dose calculations for Hanford annual environmental reports.

EXHIBIT A.1. GENII Input File - Sample Problem 1

```
######################## Program GENII Input File ############ 8 Mar 88 ####
Title: GENII Sample Problem 1
       \genii\sam\sample1.in                    Created on 08-05-1988 at 15:10
OPTIONS======================== Default ====================================
F    Near-field scenario?      (Far-field)    NEAR-FIELD: narrowly-focused
T    Population dose?         (Individual)                release, single site
F    Acute release?             (Chronic)     FAR-FIELD:  wide-scale release,
     Average Individual data set used                     multiple sites
                                Complete                                Complete
TRANSPORT OPTIONS============ Section_  EXPOSURE PATHWAY OPTIONS===== Section
T  Air Transport                  1     T  Finite plume, external       5
F  Surface Water Transport        2     F  Infinite plume, external     5
F  Biotic Transport (near-field)  3     T  Ground, external             5
F  Waste Form Degradation (near)  4     F  Recreation, external         5
                                        T  Inhalation uptake            6
REPORT OPTIONS=======================   F  Drinking water ingestion     7,8
T  Report AEDE only                     F  Aquatic foods ingestion      7,8
F  Report by radionuclide               T  Terrestrial foods ingestion  7,9
F  Report by exposure pathway           T  Animal product ingestion     7,10
F  Debug report on screen               F  Inadvertent soil ingestion

INVENTORY ##################################################################

 4   Inventory input activity units: (1-pCi  2-uCi  3-mCi  4-Ci  5-Bq)
 0   Surface soil source units (1- m2  2- m3  3- kg)
     Equilibrium question goes here
```

Use when	Release Terms — transport selected			Basic Concentrations — near-field scenario, optionally				
Release Radio-nuclide	Air /yr	Surface Water /yr	Buried Waste /m3	Air /L	Surface Soil /unit	Deep Soil /m3	Ground Water /L	Surface Water /L
H 3	7.0E+01							
C 14	1.0E+00							
KR85	7.0E+04							
SR90	2.0E-04							
NB95	1.0E-05							
RU103	2.0E-04							
RU106	2.0E-02							
SB125	1.0E-03							
I 129	5.0E-01							
I 131	2.0E-04							
CS134	1.0E-05							
CS137	4.0E-05							
PM147	1.0E-03							
PB212	2.0E-01							
BI212	1.0E-01							
U 234	2.0E-06							

EXHIBIT A.1. (contd)

U 235	7.0E-08
U 238	2.0E-06
PU238	3.0E-05
PU241	3.0E-03
AM241	1.0E-04
PU239	4.0E-04

Use when	----Derived Concentrations----- measured values are known			
Release Radio-nuclide	Terres. Plant /kg	Animal Product /kg	Drink Water /L	Aquatic Food /kg

```
TIME ##################################################################

1     Intake ends after (yr)
50    Dose calc. ends after (yr)
1     Release ends after (yr)
0     No. of years of air deposition prior to the intake period
0     No. of years of irrigation water deposition prior to the intake period

FAR-FIELD SCENARIOS (IF POPULATION DOSE) ##################################

 1          Definition option: 1-Use population grid in file POP.IN
0                               2-Use total entered on this line

NEAR-FIELD SCENARIOS ######################################################

           Prior to the beginning of the intake period: (yr)
0            When was the inventory disposed?  (Package degradation starts)
0            When was LOIC?  (Biotic transport starts)
0          Fraction of roots in upper soil (top 15 cm)
0          Fraction of roots in deep soil
0          Manual redistribution: deep soil/surface soil dilution factor

TRANSPORT #################################################################
           ====AIR TRANSPORT=================================SECTION 1=====
                   0-Calculate PM
0          Option: 1-Use chi/Q or PM value   |T          Stack release (T/F)
                   2-Select MI dist & dir    |89.0       Stack height (m)
                   3-Specific MI dist & dir  |0          Stack flow (m3/sec
0          Chi/Q or PM value                 |0          Stack radius (m)
16         MI sector index (1=S)             |0          Effluent temp. (C)
5.3E+4     MI distance from release point (m)
T          Use joint frequency data, otherwise chi/Q grid
```

EXHIBIT A.1. (contd)

```
                ====SURFACE WATER TRANSPORT=========================SECTION 2=====
0               Mixing ratio model: 0-use value, 1-river, 2-lake, 3-river flow
0               Mixing ratio, dimensionless
0               Average river flow rate for: MIXFLG=0,3 (m3/s), MIXFLG=1,2 (m/s),
0               Transit time to irrigation withdrawal location (hr)
                If mixing ratio model > 0:
0                 Rate of effluent discharge to receiving water body (m3/s)
0                 Longshore distance from release point to usage location (m)
0                 Offshore distance to the water intake (m)
0                 Average water depth in surface water body (m)
0                 Average river width (m), MIXFLG=1 only
0                 Depth of effluent discharge point to surface water (m), lake only

                ====WASTE FORM AVAILABILITY=========================SECTION 3=====
0               Waste form/package half life, (yr)
0               Waste thickness, (m)
0               Depth of soil overburden, m

                ====BIOTIC TRANSPORT OF BURIED SOURCE===============SECTION 4=====
T               Consider during inventory decay/build-up period (T/F)?
T               Consider during intake period (T/F)?   | 1-Arid non agricultural
0               Pre-Intake site condition..............| 2-Humid non agricultural
                                                       | 3-Agricultural

EXPOSURE ##################################################################

                ====EXTERNAL EXPOSURE===============================SECTION 5=====
                Exposure time:                  | Residential irrigation:
8766.0            Plume (hr)                    | T        Consider: (T/F)
2920.0            Soil contamination (hr)       | 0        Source: 1-ground water
0                 Swimming (hr)                 |                  2-surface water
0                 Boating (hr)                  | 0        Application rate (in/yr)
0                 Shoreline activities (hr)     | 0        Duration (mo/yr)
0               Shoreline type: (1-river, 2-lake, 3-ocean, 4-tidal basin)
0               Transit time for release to reach aquatic recreation (hr)
0               Average fraction of time submersed in acute cloud (hr/person-hr)

                ====INHALATION======================================SECTION 6=====
8766.0          Hours of exposure to contamination per year
0               0-No resus-  1-Use Mass Loading          2-Use Anspaugh model
0                 pension      Mass loading factor (g/m3)   Top soil available (cm)

                ====INGESTION POPULATION============================SECTION 7=====
 1              Atmospheric production definition (select option):
0                 0-Use food-weighted chi/Q, (food-sec/m3), enter value on this line
                  1-Use population-weighted chi/Q
                  2-Use uniform production
                  3-Use chi/Q and production grids (PRODUCTION will be overridden)
```

EXHIBIT A.1. (contd)

```
0          Population ingesting aquatic foods, 0 defaults to total (person)
0          Population ingesting drinking water, 0 defaults to total (person)
F          Consider dose from food exported out of region (default=F)

           Note below: S* or Source: 0-none, 1-ground water, 2-surface water
                                     3-Derived concentration entered above
           ==== AQUATIC FOODS / DRINKING WATER INGESTION=========SECTION 8====

F          Salt water? (default is fresh)

           USE        TRAN-  PROD-    -CONSUMPTION-
           ?   FOOD   SIT    UCTION   HOLDUP   RATE
           T/F TYPE   hr     kg/yr    da       kg/yr   |      DRINKING WATER
           --- ------ ----- ------- ------ ----- |-------------------------
           F   FISH    0.00  0.0E+00   0.00    0.0 | 0      Source (see above)
           F   MOLLUS  0.00  0.0E+00   0.00    0.0 | T      Treatment? T/F
           F   CRUSTA  0.00  0.0E+00   0.00    0.0 | 0      Holdup/transit(da)
           F   PLANTS  0.00  0.0E+00   0.00    0.0 | 0      Consumption (L/yr)

           ====TERRESTRIAL FOOD INGESTION=======================SECTION 9=====

           USE        GROW   --IRRIGATION--          PROD-    --CONSUMPTION--
           ?   FOOD   TIME   S RATE   TIME    YIELD   UCTION   HOLDUP   RATE
           T/F TYPE   da     * in/yr  mo/yr   kg/m2   kg/yr    da       kg/yr
           --- ------ ----- - ----- ----- ----- ------- ------ ------
           T   LEAF V 90.00  0   0.0   0.0     1.5   0.0E+00   14.0     15.0
           T   ROOT V 90.00  0   0.0   0.0     4.0   0.0E+00   14.0    140.0
           T   FRUIT  90.00  0   0.0   0.0     2.0   0.0E+00   14.0     64.0
           T   GRAIN  90.00  0   0.0   0.0     0.8   0.0E+00  180.0     72.0

           ====ANIMAL PRODUCTION CONSUMPTION===================SECTION 10====

           ---HUMAN---- TOTAL   DRINK   -------------STORED FEED--------------
USE        CONSUMPTION  PROD-   WATER   DIET  GROW  -IRRIGATION--        STOR-
?   FOOD   RATE  HOLDUP UCTION  CONTAM  FRAC-  TIME  S RATE  TIME   YIELD AGE
T/F TYPE   kg/yr  da    kg/yr   FRACT.  TION   da   * in/yr mo/yr  kg/m3 da
--- ------ ------ ----- ------ ------- ----  ---- - ----- ----- ----- -----
T   BEEF    70.0  34.0   0.00    0.00  0.25  90.0 0   0.0  0.00   0.80 180.0
T   POULTR   8.5  34.0   0.00    0.00  1.00  90.0 0   0.0  0.00   0.80 180.0
T   MILK   230.0   4.0   0.00    0.00  0.25  45.0 0   0.0  0.00   2.00 100.0
T   EGG     20.0  18.0   0.00    0.00  1.00  90.0 0   0.0  0.00   0.80 180.0
                                         -------------FRESH FORAGE------------
    BEEF                                 0.75  45.0 0   0.0  0.00   2.00 100.0
    MILK                                 0.75  30.0 0   0.0  0.00   1.50   0.0

##########################################################################
```

EXHIBIT A.2. Required GENII Population Data File - Sample Problem 1

200 Area Population (Sommer, Rau, and Robinson, PNL-4010)
Created 5-Nov-87, updated 19-Feb-88 RAP

0	0	0	0	0	0	1532	1489	195	1799
0	0	0	0	0	0	905	5283	652	129
0	0	0	0	0	0	1190	19786	2182	459
0	0	0	0	0	5	1840	5063	15088	4573
0	0	0	0	0	32	648	949	6874	78635
0	0	0	0	0	73	444	802	833	2833
0	0	0	0	0	0	555	398	493	1454
0	0	0	0	0	0	246	456	864	4521
0	0	0	0	0	0	174	1124	772	1957
0	0	0	0	0	0	92	656	5547	14822
0	0	0	0	0	0	262	5930	2963	596
0	0	0	0	0	0	235	773	2366	435
0	0	0	0	0	0	340	1329	1659	588
0	0	0	0	0	0	283	1374	230	652
0	0	0	0	0	0	6757	48661	50519	3474
0	0	0	0	0	0	1997	13161	2717	5218

EXHIBIT A.3. Required GENII Joint Frequency Data File - Sample Problem 1

200 AREA - 89 M - Pasquill A - F (1983 - 1987 Average)
Created 10-Mar-88 RAP

8 6 1 1 89.0
.89 2.65 4.7 7.15 9.8 12.7 15.6 19.0

0.30	0.27	0.29	0.19	0.23	0.20	0.13	0.12	0.11	0.08	0.06	0.07	0.10	0.08	0.14	0.13
0.17	0.10	0.09	0.09	0.10	0.05	0.05	0.03	0.05	0.03	0.03	0.02	0.04	0.04	0.04	0.07
0.16	0.12	0.10	0.06	0.08	0.06	0.07	0.03	0.02	0.01	0.01	0.03	0.04	0.03	0.06	0.09
0.77	0.51	0.41	0.35	0.49	0.49	0.44	0.32	0.36	0.19	0.20	0.28	0.43	0.47	0.59	0.58
0.29	0.14	0.12	0.12	0.21	0.21	0.31	0.25	0.31	0.19	0.22	0.25	0.46	0.39	0.39	0.25
0.24	0.15	0.11	0.12	0.20	0.18	0.25	0.23	0.27	0.20	0.25	0.31	0.54	0.45	0.45	0.31
0.94	0.48	0.37	0.40	0.58	0.48	0.41	0.35	0.35	0.22	0.31	0.24	0.29	0.29	0.59	0.77
0.27	0.15	0.12	0.11	0.13	0.13	0.07	0.08	0.09	0.05	0.08	0.04	0.08	0.15	0.24	0.23
0.22	0.09	0.07	0.07	0.11	0.07	0.10	0.05	0.07	0.04	0.05	0.03	0.04	0.09	0.19	0.22
0.65	0.41	0.26	0.27	0.39	0.35	0.34	0.23	0.28	0.22	0.25	0.29	0.55	0.85	1.11	0.75
0.26	0.09	0.08	0.09	0.23	0.28	0.22	0.25	0.32	0.20	0.28	0.47	0.76	0.82	0.61	0.37
0.22	0.08	0.08	0.07	0.12	0.20	0.24	0.22	0.35	0.34	0.40	0.67	1.14	0.88	0.70	0.37
0.43	0.24	0.16	0.11	0.12	0.10	0.11	0.10	0.15	0.20	0.35	0.38	0.29	0.32	0.63	0.39
0.08	0.06	0.04	0.03	0.04	0.02	0.04	0.04	0.02	0.06	0.06	0.08	0.07	0.11	0.17	0.09
0.04	0.03	0.01	0.02	0.01	0.00	0.02	0.01	0.02	0.03	0.04	0.07	0.08	0.06	0.15	0.09
0.23	0.12	0.05	0.06	0.09	0.12	0.17	0.14	0.18	0.15	0.25	0.32	0.62	1.09	1.06	0.37
0.15	0.06	0.05	0.05	0.07	0.10	0.13	0.16	0.22	0.16	0.29	0.59	1.27	1.26	0.74	0.30
0.09	0.05	0.04	0.03	0.07	0.07	0.21	0.18	0.28	0.27	0.38	0.83	1.31	1.21	0.86	0.31
0.08	0.11	0.05	0.02	0.01	0.00	0.02	0.03	0.04	0.10	0.30	0.38	0.24	0.26	0.43	0.10
0.03	0.02	0.01	0.00	0.00	0.00	0.01	0.01	0.02	0.04	0.04	0.10	0.05	0.07	0.10	0.03

EXHIBIT A.3. (contd)

0.02	0.01	0.01	0.00	0.00	0.00	0.00	0.01	0.01	0.03	0.03	0.06	0.06	0.05	0.10	0.01
0.11	0.11	0.04	0.02	0.02	0.03	0.08	0.09	0.10	0.17	0.25	0.37	0.62	0.97	0.77	0.16
0.09	0.04	0.02	0.01	0.01	0.05	0.07	0.08	0.11	0.13	0.25	0.41	1.17	1.24	0.73	0.16
0.04	0.01	0.02	0.01	0.03	0.05	0.10	0.16	0.12	0.10	0.20	0.51	0.88	0.92	0.61	0.12
0.01	0.02	0.02	0.02	0.00	0.00	0.00	0.01	0.01	0.03	0.09	0.17	0.10	0.11	0.30	0.04
0.00	0.00	0.01	0.00	0.00	0.00	0.00	0.00	0.00	0.02	0.04	0.04	0.02	0.03	0.06	0.00
0.00	0.00	0.00	0.00	0.00	0.00	0.00	0.00	0.00	0.01	0.03	0.02	0.02	0.03	0.05	0.01
0.02	0.03	0.01	0.01	0.00	0.00	0.02	0.03	0.08	0.14	0.20	0.20	0.36	0.74	0.47	0.03
0.02	0.02	0.01	0.00	0.00	0.00	0.04	0.04	0.06	0.07	0.14	0.18	0.40	0.79	0.50	0.06
0.01	0.00	0.01	0.00	0.00	0.01	0.05	0.05	0.02	0.02	0.04	0.12	0.20	0.31	0.16	0.04
0.00	0.00	0.00	0.00	0.00	0.00	0.00	0.00	0.00	0.02	0.08	0.10	0.04	0.05	0.14	0.00
0.00	0.00	0.00	0.00	0.00	0.00	0.00	0.00	0.00	0.01	0.03	0.01	0.01	0.02	0.03	0.00
0.00	0.00	0.00	0.00	0.00	0.00	0.00	0.00	0.00	0.00	0.01	0.00	0.01	0.02	0.03	0.00
0.02	0.01	0.00	0.01	0.00	0.00	0.00	0.01	0.05	0.11	0.14	0.12	0.19	0.47	0.47	0.02
0.03	0.02	0.01	0.01	0.00	0.00	0.00	0.01	0.05	0.05	0.09	0.12	0.18	0.37	0.31	0.03
0.01	0.00	0.00	0.00	0.00	0.00	0.02	0.01	0.00	0.01	0.03	0.04	0.04	0.09	0.05	0.01
0.00	0.00	0.00	0.00	0.00	0.00	0.00	0.00	0.00	0.00	0.01	0.03	0.01	0.00	0.03	0.00
0.00	0.00	0.00	0.00	0.00	0.00	0.00	0.00	0.00	0.00	0.01	0.01	0.00	0.01	0.01	0.00
0.00	0.00	0.00	0.00	0.00	0.00	0.00	0.00	0.00	0.00	0.00	0.00	0.00	0.00	0.01	0.00
0.01	0.00	0.00	0.00	0.00	0.00	0.00	0.01	0.01	0.04	0.07	0.05	0.04	0.21	0.20	0.01
0.02	0.02	0.00	0.00	0.00	0.00	0.00	0.00	0.02	0.02	0.04	0.03	0.05	0.10	0.10	0.00
0.00	0.00	0.00	0.00	0.00	0.00	0.00	0.00	0.01	0.00	0.00	0.01	0.02	0.01	0.01	0.00
0.00	0.00	0.00	0.00	0.00	0.00	0.00	0.00	0.00	0.00	0.00	0.01	0.00	0.00	0.01	0.00
0.00	0.00	0.00	0.00	0.00	0.00	0.00	0.00	0.00	0.00	0.00	0.00	0.00	0.00	0.00	0.00
0.00	0.00	0.00	0.00	0.00	0.00	0.00	0.00	0.00	0.00	0.00	0.00	0.00	0.00	0.00	0.00
0.00	0.00	0.00	0.01	0.00	0.00	0.00	0.00	0.01	0.04	0.07	0.03	0.05	0.08	0.04	0.01
0.00	0.00	0.00	0.00	0.00	0.00	0.00	0.01	0.01	0.03	0.04	0.02	0.00	0.05	0.06	0.00
0.00	0.00	0.00	0.00	0.00	0.00	0.00	0.00	0.00	0.00	0.00	0.00	0.01	0.01	0.00	0.00

They provide the user with examples of the types and magnitude of data that might be required.

The output of the GENII simulation based on the above input is presented as Exhibit A.4. This is a fairly typical GENII output; it consists of three separate portions, which can be identified by the page number in the upper right hand portion of the printed output. The portion identified by page numbers A.n is the Quality Assurance output portion. The input values and scenario description flags are repeated in the output to allow checking of the calculation assumptions. The portion identified by page numbers B.n includes the results of the (optional) atmospheric dispersion calculations. In the case of Sample Problem 1, this is a one-page report providing the calculated population-weighted atmospheric dispersion factor.

The portion identified with page numbers C.n includes the actual dose calculation results. For Sample Problem 1, this consists of three summary pages. The first, page C.1, illustrates the effective dose equivalent summary calculation, from which individual organ doses may be obtained. This page also provides a summary table of the dominant organ, dominant radionuclide, and dominant exposure pathway. The second page, C.2, illustrates the dose assembly matrix (defined in Figure 3.6 of Volume 1 in this GENII series) from which the annual dose, effective dose equivalent, cumulative dose, and maximum annual dose may be obtained in a single calculational run. In this example, because the exposure time was only one year, the contributions shown in this dose matrix for years two and three are set to zero. The third page, C.3, provides the dose contribution by radionuclide, as a function of ingestion, inhalation, and external exposure.

A.2 GENII SAMPLE PROBLEM 2

The second sample problem represents the calculation of the dose to a maximally exposed individual from the chronic release of radionuclides into surface water. The individual is assumed to drink river water, to consume fish from the river, to make recreational use of the river, and to irrigate crops and animal feed with the water. External doses result from exposure to the water, to sediments, and to irrigated soil. No contribution to dose is considered from inhalation, that pathway is specifically turned off.

EXHIBIT A.4. GENII Output File Sample Problem 1

```
-----------------------------------------------------------------------------
                        GENII  Dose Calculation Program
                           (Version 1.351 30-Aug-88)

Case title:   GENII Sample Problem 1

Executed on:  09/27/88 at 16:59:06                                  Page A.  1
-----------------------------------------------------------------------------

          This is a far-field (wide-scale release, multiple site) scenario.
          Release is chronic
          Dose to exposed population of  3.409E+05

          THE FOLLOWING TRANSPORT MODES ARE CONSIDERED
               Air

          THE FOLLOWING EXPOSURE PATHS ARE CONSIDERED:
               Finite plume, external
               Ground, external
               Inhalation uptake
               Terrestrial foods ingestion
               Animal product ingestion

          THE FOLLOWING TIMES ARE USED:
               Intake ends after (yr):                  1.0
               Dose calculations ends after (yr):      50.0
               Release ends after (yr):                 1.0

========== FILE NAMES AND TITLES OF FILES/LIBRARIES USED =======================

                                        \genii\sam\sample1.in            9-27-88
 GENII Default Parameter Values (3-Aug-88 RAP)                           8-12-88
 RMDLIB - Radionuclide Master Library  (29-Aug-88 RAP)                   8-29-88
 Food Transfer Factor Library - (RAP  29-Aug-88) (UPDATED LEACHING FA    8-29-88
 External Dose Factors for GENII in person-Sv/yr per Bq/n (28-Aug-88     8-29-88
 Internal Yearly Dose Increments  (Sv/Bq)  29-Aug-88  RAP                8-29-88
 200 Area Population (Sommer, Rau, and Robinson, 1981, PNL-4010)

 200 AREA - 89 M - Pasquill A - F (1983 - 1987 Average)

=============================================================================

          -------- ----Release Terms------
          Release          Surface Buried
          Radio-   Air     Water   Source
          nuclide   Ci/yr   Ci/yr   Ci/m3
          -------- ------- ------- -------
          H 3      7.0E+01 0.0E+00 0.0E+00
          C 14     1.0E+00 0.0E+00 0.0E+00
```

KR85	7.0E+04	0.0E+00	0.0E+00
SR90	2.0E-04	0.0E+00	0.0E+00
NB95	1.0E-05	0.0E+00	0.0E+00
RU103	2.0E-04	0.0E+00	0.0E+00
RU106	2.0E-02	0.0E+00	0.0E+00
SB125	1.0E-03	0.0E+00	0.0E+00
I 129	5.0E-01	0.0E+00	0.0E+00
I 131	2.0E-04	0.0E+00	0.0E+00
CS134	1.0E-05	0.0E+00	0.0E+00
CS137	4.0E-05	0.0E+00	0.0E+00
PM147	1.0E-03	0.0E+00	0.0E+00
PB212	2.0E-01	0.0E+00	0.0E+00
BI212	1.0E-01	0.0E+00	0.0E+00
U 234	2.0E-06	0.0E+00	0.0E+00
U 235	7.0E-08	0.0E+00	0.0E+00
U 238	2.0E-06	0.0E+00	0.0E+00
PU238	3.0E-05	0.0E+00	0.0E+00
PU241	3.0E-03	0.0E+00	0.0E+00
AM241	1.0E-04	0.0E+00	0.0E+00
PU239	4.0E-04	0.0E+00	0.0E+00

========== AIR TRANSPORT ==========

Joint frequency data input.

8.9E+01 Effective stack height (m)

========== EXTERNAL EXPOSURE ==========

8.8E+03 Hours of exposure to plume

2.9E+03 Hours of exposure to ground contamination

========== INHALATION ==========

8.8E+03 Hours of exposure to contamination per year

Resuspension not considered

========== INGESTION POPULATION ==========

1 Atmospheric production definition: 1 - Use population-weighted chi/Q

Food production in region assumed to equal consumption.

========== TERRESTRIAL FOOD INGESTION ==========

FOOD TYPE	GROW TIME d	--IRRIGATION-- S *	RATE in/yr	TIME mo/yr	YIELD kg/m2	PROD-UCTION kg/yr	--CONSUMPTION-- HOLDUP d	RATE kg/yr
Leaf Veg	90.0	0	0.0	0.0	1.5		14.0	1.5E+01
Oth. Veg	90.0	0	0.0	0.0	4.0		14.0	1.4E+02
Fruit	90.0	0	0.0	0.0	2.0		14.0	6.4E+01
Cereals	90.0	0	0.0	0.0	0.8		180.0	7.2E+01

EXHIBIT A.4. (contd)

========== ANIMAL FOOD INGESTION ==========

FOOD TYPE	---HUMAN---- CONSUMPTION RATE kg/yr	HOLDUP d	TOTAL PROD-UCTION kg/yr	DRINK WATER CONTAM FRACT.	----------STORED FEED---------- DIET FRAC-TION	GROW TIME d	-IRRIGATION-- S *	RATE in/yr	TIME mo/yr	YIELD kg/m3	STOR-AGE d
Meat	7.0E+01	34.0		0.00	0.3	90.00	0	0.0	0.0	0.80	180.0
Poultry	8.5E+00	34.0		0.00	1.0	90.00	0	0.0	0.0	0.80	180.0
Cow Milk	2.3E+02	4.0		0.00	0.3	45.00	0	0.0	0.0	2.00	100.0
Eggs	2.0E+01	18.0		0.00	1.0	90.00	0	0.0	0.0	0.80	180.0
					----------FRESH FORAGE----------						
Meat					0.75	45.0	0	0.0	0.0	2.00	100.0
Cow Milk					0.75	30.0	0	0.0	0.0	1.50	0.0

==========

Input prepared by: _____ Date: _____

Input checked by: _____ Date: _____

==========

GENII Dose Calculation Program
(Version 1.351 30-Aug-88)

Case title: GENII Sample Problem 1

Executed on: 09/27/88 at 17:01:43 Page B. 1

1.6E-03 Population-weighted chi/Q

Source area external dose modification factor: 1.00000

EXHIBIT A.4. (contd)

GENII Dose Calculation Program
(Version 1.351 30-Aug-88)

Case title: GENII Sample Problem 1

Executed on: 09/27/88 at 17:07:11 Page C. 1

Release period:	1.0
Uptake/exposure period:	1.0
Dose commitment period:	50.0
Dose units:	Person-rem

Organ	Committed Dose Equivalent	Weighting Factors	Weighted Dose Equivalent
Gonads	9.8E-02	2.5E-01	2.4E-02
Breast	1.0E-01	1.5E-01	1.5E-02
R Marrow	2.1E-01	1.2E-01	2.6E-02
Lung	4.0E-01	1.2E-01	4.9E-02
Thyroid	2.0E+02	3.0E-02	6.1E+00
Bone Sur	1.3E+00	3.0E-02	3.8E-02
Liver	1.9E-01	6.0E-02	1.2E-02
LL Int.	1.0E-01	6.0E-02	6.2E-03
UL Int.	9.5E-02	6.0E-02	5.7E-03
S Int.	9.3E-02	6.0E-02	5.6E-03
Stomach	5.9E-02	6.0E-02	3.5E-03
Internal Effective Dose Equivalent			6.3E+00
External Dose			3.3E-02
Annual Effective Dose Equivalent			6.3E+00

Controlling Organ:	Thyroid
Controlling Pathway:	Ing
Controlling Radionuclide:	I 129
Inhalation EDE:	1.3E-01
Ingestion EDE:	6.1E+00

EXHIBIT A.4. (contd)

GENII Dose Calculation Program
(Version 1.351 30-Aug-88)

Case title: GENII Sample Problem 1

Executed on: 09/27/88 at 17:07:11 Page C. 2

Release period:	1.0
Uptake/exposure period:	1.0
Dose commitment period:	50.0
Dose units:	Person-rem

	Dose Commitment Year 1	2	3	...			
Internal Intake Year: 3			0.0E+00	...			
			+				
2		0.0E+00	0.0E+00	...			Internal Effective Dose Equivalent
		+	+				
1	5.5E+00 +	6.0E-01 +	6.9E-02 +	...	=	6.3E+00	
	||	||	||				
Internal Annual Dose	5.5E+00 +	6.0E-01 +	6.9E-02 +	...	=	6.3E+00	Cumulative Internal Dose
	+	+	+			+	
External Annual Dose	3.3E-02	0.0E+00	0.0E+00	...		3.3E-02	
	||	||	||			||	
Annual Dose	5.6E+00 +	6.0E-01 +	6.9E-02 +	...	=	6.3E+00	Cumulative Dose
						5.6E+00	Maximum Annual Dose Occurred In Year 1

GENII Dose Calculation Program
(Version 1.351 30-Aug-88)

Case title: GENII Sample Problem 1
Executed on: 09/27/88 at 17:07:11

Release period: 1.0
Uptake/exposure period: 1.0
Dose commitment period: 50.0
Dose units: Person-rem

Radio-nuclide	Inhalation Effective Dose Equivalent	Ingestion Effective Dose Equivalent	External Dose	Internal Effective Dose Equivalent	Annual Effective Dose Equivalent
H 3	2.5E-03	1.3E-02	0.0E+00	1.6E-02	1.6E-02
C 14	8.4E-04	5.1E-02	0.0E+00	5.2E-02	5.2E-02
KR 85	0.0E+00	0.0E+00	3.3E-02	0.0E+00	3.3E-02
SR 90	1.7E-05	5.8E-05	2.9E-10	7.6E-05	7.6E-05
Y 90	2.6E-08	3.0E-06	1.5E-08	3.0E-06	3.1E-06
NB 95	2.4E-08	2.3E-08	1.6E-08	4.7E-08	6.3E-08
RU 103	7.7E-07	5.6E-07	2.3E-07	1.3E-06	1.6E-06
PD 103	0.0E+00	0.0E+00	0.0E+00	0.0E+00	0.0E+00
RH 103M	3.5E-10	8.8E-09	1.0E-10	9.2E-09	9.3E-09
RU 106	4.0E-03	7.8E-04	4.4E-05	4.8E-03	4.8E-03
SB 125	5.3E-06	4.3E-06	5.3E-06	9.6E-06	1.5E-05
TE 125M	1.1E-09	1.6E-06	4.8E-09	1.6E-06	1.6E-06
I 129	3.3E-02	6.1E+00	7.6E-05	6.1E+00	6.1E+00
I 131	2.6E-06	1.5E-04	3.1E-07	1.5E-04	1.5E-04
XE 131M	0.0E+00	0.0E+00	2.1E-11	0.0E+00	2.1E-11
CS 134	1.8E-07	4.3E-06	1.8E-07	4.5E-06	4.7E-06
CS 137	4.6E-07	1.3E-05	3.0E-07	1.3E-05	1.3E-05
PM 147	1.7E-05	1.9E-06	9.4E-11	1.9E-05	1.9E-05
SM 147	7.5E-17	4.0E-16	0.0E+00	4.7E-16	4.7E-16
PB 212	1.2E-02	3.1E-04	5.9E-06	1.2E-02	1.2E-02
BI 212	1.3E-03	7.6E-06	5.1E-05	1.3E-03	1.3E-03
U 234	1.1E-04	7.3E-08	2.2E-12	1.1E-04	1.1E-04
U 235	3.7E-06	2.6E-09	6.7E-11	3.7E-06	3.7E-06
TH 231	2.1E-12	1.3E-10	4.0E-12	1.3E-10	1.3E-10
PA 231	1.0E-14	3.9E-12	2.3E-16	3.9E-12	3.9E-12
AC 227	1.2E-19	1.5E-14	6.8E-21	1.5E-14	1.5E-14
TH 227	0.0E+00	2.8E-17	5.9E-18	2.8E-17	3.4E-17
FR 223	0.0E+00	1.0E-19	3.6E-20	1.0E-19	1.4E-19
RA 223	0.0E+00	2.1E-16	1.5E-17	2.1E-16	2.3E-16
U 238	1.0E-04	6.7E-08	1.2E-12	1.0E-04	1.0E-04
TH 234	1.2E-10	2.0E-08	4.6E-10	2.0E-08	2.0E-08

EXHIBIT A.4. (contd)

PA 234	9.3E-16	5.1E-12	7.0E-11	5.1E-12	7.5E-11
PU 238	3.7E-03	1.2E-05	1.8E-11	3.7E-03	3.7E-03
PU 241	6.4E-03	2.5E-05	1.4E-15	6.4E-03	6.4E-03
AM 241	1.9E-02	4.4E-04	6.3E-09	1.9E-02	1.9E-02
PU 239	5.1E-02	1.8E-04	2.7E-10	5.2E-02	5.2E-02

All data required to perform this calculation is contained in the input file, no additional data files are needed.

The input file to perform this calculation is provided as Exhibit A.5. The output resulting from the calculation is given in Exhibit A.6.

The output of GENII Sample Problem 2 is similar in form to that of Sample Problem 1. Only two of the output portions are listed, those labeled with page numbers A.n and C.n. As with problem 1, those labeled with A.n page numbers are the quality assurance pages, repeating the input for record purposes. Those labeled C.n are the dose results. No pages of the sequence B.n were produced in this example, because no atmospheric dispersion calculations were requested.

For brevity in this document, pages C.1 and C.2 have been omitted. The formats of these pages are identical with those provided in Exhibit A.4 for Sample Problem 1; the pages provide the effective dose equivalent summary and the dose assembly matrix grid.

The page labeled C.3 in Exhibit A.6 provides the doses for Sample Problem 2 listed by exposure pathway for the organs for which dose is calculated, for the internal exposures. The page labeled C.4 provides the external doses by exposure pathway. The organ-related information has been included in the doses presented through the derivation of the dose factors, as described in Section 4 of Volume 1 of this GENII series, and so it is not reported. Internal doses to the organs are reported by radionuclide on page C.5. A final page, C.6, has been omitted from this report. Its format is the same as that shown for page C.3 of Sample Problem 1, the total dose listed by radionuclide.

A.3 GENII SAMPLE PROBLEM 3

The third sample problem represents the prospective calculation of the impacts to the population in a selected downwind sector of an acute accidental release of radionuclides to air. Rather than having the code calculate the 95th percentile value of the air concentration, a value of the time-integrated atmospheric dispersion parameter, E/Q, is input to this sample. Because the E/Q is input, the infinite-plume submersion model must be used.

EXHIBIT A.5. GENII Input File- Sample Problem 2

```
######################## Program GENII Input File ############# 7 Mar 88 ####
Title: GENII Sample Problem 2
       \genii\sam\sample2.in                    Created on 08-05-1988 at 15:41
OPTIONS======================== Default ====================================
F    Near-field scenario?      (Far-field)    NEAR-FIELD: narrowly-focused
F    Population dose?         (Individual)                release, single site
F    Acute release?             (Chronic)     FAR-FIELD:  wide-scale release,
     Maximum Individual data set used                     multiple sites
                                Complete                                  Complete
TRANSPORT OPTIONS============ Section   EXPOSURE PATHWAY OPTIONS===== Section
F  Air Transport                 1      F  Finite plume, external        5
T  Surface Water Transport       2      F  Infinite plume, external      5
F  Biotic Transport (near-field) 3      T  Ground, external              5
F  Waste Form Degradation (near) 4      T  Recreation, external          5
                                        F  Inhalation uptake             6
REPORT OPTIONS======================    T  Drinking water ingestion      7,8
T  Report AEDE only                     T  Aquatic foods ingestion       7,8
T  Report by radionuclide               T  Terrestrial foods ingestion   7,9
T  Report by exposure pathway           T  Animal product ingestion      7,10
F  Debug report on screen               F  Inadvertent soil ingestion

INVENTORY ##################################################################

 4   Inventory input activity units: (1-pCi  2-uCi  3-mCi  4-Ci  5-Bq)
 0   Surface soil source units (1- m2  2- m3  3- kg)
     Equilibrium question goes here

     --------|----Release Terms------|----------Basic Concentrations---------|
     Use when|  transport selected   |  near-field scenario, optionally      |
     --------|-----------------------|---------------------------------------|
     Release |        Surface Buried |        Surface Deep    Ground  Surface|
     Radio-  |Air     Water   Waste  |Air     Soil    Soil    Water   Water  |
     nuclide |/yr     /yr     /m3    |/L      /unit   /m3     /L      /L     |
     --------|------- ------- -------|------- ------- ------- ------- -------|
     H 3             5.3E+03
     I 129           9.0E-03

     --------|----Derived Concentrations-----|
     Use when|   measured values are known   |
     --------|-------------------------------|
     Release |Terres. Animal  Drink   Aquatic|
     Radio-  |Plant   Product Water   Food   |
     nuclide |/kg     /kg     /L      /kg    |
     --------|------- ------- ------- -------|
```

EXHIBIT A.5. (contd)

```
TIME ##################################################################

1     Intake ends after (yr)
50    Dose calc. ends after (yr)
1     Release ends after (yr)
0     No. of years of air deposition prior to the intake period
0     No. of years of irrigation water deposition prior to the intake period

FAR-FIELD SCENARIOS (IF POPULATION DOSE) ##################################

0          Definition option: 1-Use population grid in file POP.IN
0                             2-Use total entered on this line

NEAR-FIELD SCENARIOS ######################################################

           Prior to the beginning of the intake period: (yr)
0            When was the inventory disposed?  (Package degradation starts)
0            When was LOIC?  (Biotic transport starts)
0          Fraction of roots in upper soil (top 15 cm)
0          Fraction of roots in deep soil
0          Manual redistribution: deep soil/surface soil dilution factor

TRANSPORT #################################################################
           ====AIR TRANSPORT=================================SECTION 1=====
                  0-Calculate PM              |
 1         Option: 1-Use chi/Q or PM value    |F          Stack release (T/F)
                  2-Select MI dist & dir      |0          Stack height (m)
                  3-Specifc MI dist & dir     |0          Stack flow (m3/sec
0          Chi/Q or PM value                  |0          Stack radius (m)
0          MI sector index (1=S)              |0          Effluent temp. (C)
0          MI distance from release point (m)
T          Use joint frequency data, otherwise chi/Q grid

           ====SURFACE WATER TRANSPORT=========================SECTION 2=====
 0         Mixing ratio model: 0-use value, 1-river, 2-lake, 3-river flow
1.0        Mixing ratio, dimensionless
2860.0     Average river flow rate for: MIXFLG=0,3 (m3/s), MIXFLG=1,2 (m/s),
24.0       Transit time to irrigation withdrawl location (hr)
           If mixing ratio model > 0:
0.0          Rate of effluent discharge to receiving water body (m3/s)
0.0          Longshore distance from release point to usage location (m)
0.0          Offshore distance to the water intake (m)
0.0          Average water depth in surface water body (m)
0            Average river width (m), MIXFLG=1 only
0            Depth of effluent discharge point to surface water (m), lake only

           ====WASTE FORM AVAILABILITY=========================SECTION 3=====
0          Waste form/package half life, (yr)
0          Waste thickness, (m)
0          Depth of soil overburden, m
```

EXHIBIT A.5. (contd)

```
            ====BIOTIC TRANSPORT OF BURIED SOURCE===============SECTION 4=====
T           Consider during inventory decay/build-up period (T/F)?
T           Consider during intake period (T/F)?  | 1-Arid non agricultural
0           Pre-Intake site condition..............| 2-Humid non agricultural
                                                  | 3-Agricultural

EXPOSURE ##################################################################

            ====EXTERNAL EXPOSURE==============================SECTION 5=====
            Exposure time:                  |  Residential irrigation:
0             Plume (hr)                    | T      Consider: (T/F)
4380.0        Soil contamination (hr)       | 2       Source: 1-ground water
100.0         Swimming (hr)                 |                 2-surface water
100.0         Boating (hr)                  | 40.0    Application rate (in/yr)
500.0         Shoreline activities (hr)     | 6       Duration (mo/yr)
1           Shoreline type: (1-river, 2-lake, 3-ocean, 4-tidal basin)
8           Transit time for release to reach aquatic recreation (hr)
0           Average fraction of time submersed in acute cloud (hr/person-hr)

            ====INHALATION=====================================SECTION 6=====
0           Hours of exposure to contamination per year
0           0-No resus-  1-Use Mass Loading          2-Use Anspaugh model
0             pension      Mass loading factor (g/m3)   Top soil available (cm)

            ====INGESTION POPULATION===========================SECTION 7=====
0           Atmospheric production definition (select option):
0             0-Use food-weighted chi/Q, (food-sec/m3), enter value on this line
              1-Use population-weighted chi/Q
              2-Use uniform production
              3-Use chi/Q and production grids (PRODUCTION will be overridden)
0           Population ingesting aquatic foods, 0 defaults to total (person)
0           Population ingesting drinking water, 0 defaults to total (person)
F           Consider dose from food exported out of region (default=F)

            Note below: S* or Source: 0-none, 1-ground water, 2-surface water
                                      3-drinking water system
            ==== AQUATIC FOODS / DRINKING WATER INGESTION=========SECTION 8====

F           Salt water? (default is fresh)
```

USE ? T/F	FOOD TYPE	TRAN-SIT hr	PROD-UCTION kg/yr	-CONSUMPTION- HOLDUP da	RATE kg/yr	DRINKING WATER	
T	FISH	0.00	1.5E+04	1.00	40.0	2	Source (see above)
F	MOLLUS	0.00	0.0E+00	0.00	0.0	T	Treatment? T/F
F	CRUSTA	0.00	0.0E+00	0.00	0.0	1	Holdup/transit(da)
F	PLANTS	0.00	0.0E+00	0.00	0.0	730	Consumption (L/yr)

EXHIBIT A.5. (contd)

====TERRESTRIAL FOOD INGESTION==========SECTION 9=====

USE ? T/F	FOOD TYPE	GROW TIME da	S *	--IRRIGATION-- RATE in/yr	TIME mo/yr	YIELD kg/m2	PROD-UCTION kg/yr	--CONSUMPTION-- HOLDUP da	RATE kg/yr
T	LEAF V	90.00	2	35.0	6.0	1.5	0.0E+00	1.0	30.0
T	ROOT V	90.00	2	40.0	6.0	4.0	0.0E+00	5.0	220.0
T	FRUIT	90.00	2	35.0	6.0	2.0	0.0E+00	5.0	330.0
T	GRAIN	90.00	2	0.0	0.0	0.8	0.0E+00	180.0	80.0

====ANIMAL PRODUCTION CONSUMPTION==========SECTION 10====

USE ? T/F	FOOD TYPE	---HUMAN---- CONSUMPTION RATE kg/yr	HOLDUP da	TOTAL PROD-UCTION kg/yr	DRINK WATER CONTAM FRACT.	----------STORED FEED---------- DIET FRAC-TION	GROW TIME da	-IRRIGATION-- S *	RATE in/yr	TIME mo/yr	YIELD kg/m3	STOR-AGE da
T	BEEF	80.0	15.0	0.00	1.00	0.25	90.0	2	0.0	0.00	0.80	180.0
T	POULTR	18.0	1.0	0.00	1.00	1.00	90.0	2	0.0	0.00	0.80	180.0
T	MILK	270.0	1.0	0.00	1.00	0.25	45.0	2	47.0	6.00	2.00	100.0
T	EGG	30.0	1.0	0.00	1.00	1.00	90.0	2	0.0	0.00	0.80	180.0
						----------FRESH FORAGE----------						
	BEEF					0.75	45.0	2	47.0	6.00	2.00	100.0
	MILK					0.75	30.0	2	47.0	6.00	1.50	0.0

##

EXHIBIT A.6. GENII Output File - Sample Problem 2

```
-----------------------------------------------------------------------------
                        GENII  Dose Calculation Program
                           (Version 1.351 30-Aug-88)

Case title:   GENII Sample Problem 2

Executed on:  09/27/88 at 17:07:30                                Page A.  1
-----------------------------------------------------------------------------

          This is a far-field (wide-scale release, multiple site) scenario.
          Release is chronic
          Individual dose

          THE FOLLOWING TRANSPORT MODES ARE CONSIDERED
               Surface Water

          THE FOLLOWING EXPOSURE PATHS ARE CONSIDERED:
               Ground, external
               Recreation, external
               Drinking water ingestion
               Aquatic foods ingestion
               Terrestrial foods ingestion
               Animal product ingestion

          THE FOLLOWING TIMES ARE USED:
               Intake ends after (yr):                 1.0
               Dose calculations ends after (yr):     50.0
               Release ends after (yr):                1.0

========== FILE NAMES AND TITLES OF FILES/LIBRARIES USED =======================

                                        \genii\sam\sample2.in            8-05-88
 GENII Default Parameter Values (3-Aug-88 RAP)                           8-12-88
 RMDLIB - Radionuclide Master Library  (29-Aug-88 RAP)                   8-29-88
 Food Transfer Factor Library - (RAP  29-Aug-88) (UPDATED LEACHING FA    8-29-88
 Bioaccumulation Factor Library - (30-Aug-88) RAP                        8-30-88
 External Dose Factors for GENII in person-Sv/yr per Bq/n (28-Aug-88     8-29-88
 Internal Yearly Dose Increments  (Sv/Bq)  29-Aug-88  RAP                8-29-88

=============================================================================

          -------- ----Release Terms------
          Release          Surface Buried
          Radio-   Air     Water   Source
          nuclide   Ci/yr   Ci/yr   Ci/m3
          -------- ------- ------- -------
          H 3      0.0E+00 5.3E+03 0.0E+00
          I 129    0.0E+00 9.0E-03 0.0E+00
```

EXHIBIT A.6. (contd)

========== SURFACE WATER TRANSPORT ==========

0	Mixing ratio model: 0-use value, 1-river, 2-lake, 3-river flow
2.4E+01	Transit time to irrigation withdrawl location (h)
2.9E+03	Average water flow rate for: MIXFLG=1,2 (m/s), MIXFLG=0,3 (m3/s)
1.0E+00	Mixing ratio, dimensionless

========== EXTERNAL EXPOSURE ==========

4.4E+03	Hours of exposure to ground contamination
2	Residential irrigation source 1-ground water, 2-surface water
4.0E+01	Residential irrigation application rate (in/yr)
6.0E+00	Residential irrigation duration (mo/yr)
1.0E+02	Hours of exposure from swimming
1.0E+02	Hours of exposure from boating
5.0E+02	Hours of exposure from shoreline activities
1	Shoreline type: 1-river, 2-lake, 3-ocean, 4-tidal basin
8.0E+00	Surface water transit time to recreational site (h)

========== DRINKING WATER SOURCE/IRRIGATION ==========

7.3E+02	Drinking water consumption rate (l/yr)
2	Drinking water source: 1-ground, 2-surface, 3-system
T	Drinking water treatment: T/F
1.0	Drinking water transit/holdup time (d)

========== AQUATIC FOODS INGESTION ==========

FOOD TYPE	TRAN-SIT h	PROD-UCTION kg/yr	----CONSUMPTION---- HOLDUP d	RATE kg/yr
Fish	0.00E+00	1.50E+04	1.00E+00	4.00E+01

========== TERRESTRIAL FOOD INGESTION ==========

FOOD TYPE	GROW TIME d	S *	--IRRIGATION-- RATE in/yr	TIME mo/yr	YIELD kg/m2	PROD-UCTION kg/yr	--CONSUMPTION-- HOLDUP d	RATE kg/yr
Leaf Veg	90.0	2	35.0	6.0	1.5	0.00E+00	1.0	3.0E+01
Oth. Veg	90.0	2	40.0	6.0	4.0	0.00E+00	5.0	2.2E+02
Fruit	90.0	2	35.0	6.0	2.0	0.00E+00	5.0	3.3E+02
Cereals	90.0	2	0.0	0.0	0.8	0.00E+00	180.0	8.0E+01

EXHIBIT A.6. (contd)

========== ANIMAL FOOD INGESTION ==========

FOOD TYPE	HUMAN CONSUMPTION RATE kg/yr	HUMAN HOLDUP d	TOTAL PRODUCTION kg/yr	DRINK WATER CONTAM FRACT.	STORED FEED DIET FRACTION	STORED FEED GROW TIME d	STORED FEED IRRIGATION S *	STORED FEED IRRIGATION RATE in/yr	STORED FEED IRRIGATION TIME mo/yr	STORED FEED YIELD kg/m3	STORED FEED STORAGE d
Meat	8.0E+01	15.0	0.0E+00	1.00	0.3	90.00	2	0.0	0.0	0.80	180.0
Poultry	1.8E+01	1.0	0.0E+00	1.00	1.0	90.00	2	0.0	0.0	0.80	180.0
Cow Milk	2.7E+02	1.0	0.0E+00	1.00	0.3	45.00	2	47.0	6.0	2.00	100.0
Eggs	3.0E+01	1.0	0.0E+00	1.00	1.0	90.00	2	0.0	0.0	0.80	180.0
					FRESH FORAGE						
Meat					0.75	45.0	2	47.0	6.0	2.00	100.0
Cow Milk					0.75	30.0	2	47.0	6.0	1.50	0.0

==========

Input prepared by: _____ Date: _____

Input checked by: _____ Date: _____

==========

Source area external dose modification factor: 1.00000

EXHIBIT A.6. (contd)

GENII Dose Calculation Program
(Version 1.351 30-Aug-88)

Case title: GENII Sample Problem 2

Executed on: 09/27/88 at 17:08:32 Page C. 3

Release period:	1.0
Uptake/exposure period:	1.0
Dose commitment period:	50.0
Dose units:	Rem

Committed Dose Equivalent by Exposure Pathway

Pathway	Lung	Stomach	S Int.	UL Int.	LL Int.	Bone Su	R Marro	Testes
Leaf Veg	6.9E-08	4.0E-08	7.3E-08	7.3E-08	7.3E-08	3.4E-08	6.9E-08	6.9E-08
Oth. Veg	5.0E-07	2.9E-07	5.3E-07	5.3E-07	5.3E-07	2.4E-07	5.0E-07	5.0E-07
Fruit	1.1E-06	6.5E-07	1.2E-06	1.2E-06	1.2E-06	5.5E-07	1.1E-06	1.1E-06
Cereals	0.0E+00	0.0E+00	0.0E+00	0.0E+00	0.0E+00	0.0E+00	0.0E+00	0.0E+00
Meat	2.5E-07	1.5E-07	2.7E-07	2.7E-07	2.7E-07	1.2E-07	2.5E-07	2.5E-07
Poultry	5.0E-08	2.9E-08	5.3E-08	5.3E-08	5.3E-08	2.4E-08	5.0E-08	5.0E-08
Cow Milk	9.4E-07	5.4E-07	1.0E-06	1.0E-06	1.0E-06	4.6E-07	9.4E-07	9.4E-07
Eggs	8.8E-08	5.1E-08	9.3E-08	9.3E-08	9.3E-08	4.3E-08	8.8E-08	8.8E-0[illegible]
Swim Ing	7.5E-09	4.4E-09	8.0E-09	8.0E-09	8.0E-09	3.7E-09	7.5E-09	7.5E-0[illegible]
Water	2.7E-06	1.6E-06	2.9E-06	2.9E-06	2.9E-06	1.3E-06	2.7E-06	2.7E-06
Fish	1.4E-07	8.4E-08	1.5E-07	1.5E-07	1.5E-07	7.1E-08	1.5E-07	1.4E-07
Total	5.9E-06	3.4E-06	6.2E-06	6.2E-06	6.2E-06	2.9E-06	5.9E-06	5.9E-06

EXHIBIT A.6. (contd)

Pathway	Ovaries	Muscle	Thyroid	Bladder
Leaf Veg	6.9E-08	6.9E-08	3.8E-07	5.1E-11
Oth. Veg	5.0E-07	5.0E-07	8.0E-07	5.1E-11
Fruit	1.1E-06	1.1E-06	1.4E-06	4.5E-11
Cereals	0.0E+00	0.0E+00	0.0E+00	0.0E+00
Meat	2.5E-07	2.5E-07	4.6E-07	3.4E-11
Poultry	5.0E-08	5.0E-08	5.0E-08	1.3E-14
Cow Milk	9.4E-07	9.4E-07	3.1E-06	3.6E-10
Eggs	8.8E-08	8.8E-08	1.1E-07	3.4E-12
Swim Ing	7.5E-09	7.5E-09	9.2E-09	2.7E-13
Water	2.7E-06	2.7E-06	3.2E-06	7.9E-11
Fish	1.4E-07	1.4E-07	1.8E-06	2.7E-10
Total	5.9E-06	5.9E-06	1.1E-05	8.9E-10

EXHIBIT A.6. (contd)

GENII Dose Calculation Program
(Version 1.351 30-Aug-88)

Case title: GENII Sample Problem 2

Executed on: 09/27/88 at 17:08:32 Page C. 4

Release period:	1.0
Uptake/exposure period:	1.0
Dose commitment period:	50.0
Dose units:	Rem

External Dose by Exposure Pathway

Pathway	
Sur Soil	1.4E-12
Swim Ext	1.8E-13
Boating	9.2E-14
Shore	1.2E-12
Total	2.9E-12

EXHIBIT A.6. (contd)

GENII Dose Calculation Program
(Version 1.351 30-Aug-88)

Case title: GENII Sample Problem 2

Executed on: 09/27/88 at 17:08:32 Page C. 5

Release period:	1.0
Uptake/exposure period:	1.0
Dose commitment period:	50.0
Dose units:	Rem

Committed Dose Equivalent by Radionuclide

Radionuclide	Lung	Stomach	S Int.	UL Int.	LL Int.	Bone Su	R Marro	Testes
H 3	5.9E-06	3.4E-06	6.2E-06	6.2E-06	6.2E-06	2.9E-06	5.9E-06	5.9E-06
I 129	3.4E-10	3.9E-10	3.1E-10	2.9E-10	3.1E-10	2.7E-09	1.4E-09	2.7E-10
Total	5.9E-06	3.4E-06	6.2E-06	6.2E-06	6.2E-06	2.9E-06	5.9E-06	5.9E-06

Radionuclide	Ovaries	Muscle	Thyroid	Bladder
H 3	5.9E-06	5.9E-06	5.9E-06	0.0E+00
I 129	2.9E-10	6.8E-10	5.4E-06	8.9E-10
Total	5.9E-06	5.9E-06	1.1E-05	8.9E-10

Doses are calculated for exposure to radioactive materials deposited on the ground, on food crops, and on animal fodder. Because the code is working in a prospective mode, doses are calculated four times, that is assuming the release occurred in the winter, spring, summer, or autumn.

Because the population-weighted E/Q is input, neither the population data file nor the atmospheric dispersion data files are necessary. All the needed data is available in the input file. The data input file is presented in Exhibit A.7. The resultant output_file is presented as Exhibit A.8.

The initial pages of output for Sample Problem 3 reflect the input. The page of atmospheric dispersion data, B.1, has been omitted from this document to save space, because it merely repeats the input E/Q value. The code produces extensive information about the exposures for each season. The format can be the same for each season as those shown for Sample Problems 1 and 2. For simplicity, only the effective dose equivalent summary pages for the four seasons are shown here. These are identified as pages C.1, C.4, C.7, and C.10 in Exhibit A.8. A detailed review of these outputs shows that the inhalation and submersion doses are the same for each season, as expected. However, the ingestion doses are smallest if an accident were to occur in winter when the agricultural productivity is lowest. Ingestion doses peak in autumn because, for that season, accidents are assumed to occur immediately before harvest.

The output data file MEDIA.OUT prepared by this example is given as Exhibit A.9. This file shows the integrated air, soil, and water concentrations calculated for each radionuclide for each season. The MEDIA.OUT file is not routinely printed, and must be accessed by the user directly after each GENII simulation.

A.4 GENII SAMPLE PROBLEM 4

The fourth sample problem displays the near-field scenario capabilities of the GENII package. In this scenario, an intruder is assumed to contact contaminated soil buried 5 meters below the ground through a drilling intrusion. The short exposure times and low manual redistribution factor are representative of someone inadvertently bringing a small amount of contaminated material to the soil surface and being exposed for a short time.

EXHIBIT A.7. GENII Input File - Sample Problem 3

```
######################### Program GENII Input File ############ 8 Mar 88 ####
Title: GENII Sample Problem 3
       \genii\sam\sample3.in                    Created on 08-05-1988 at 15:40
OPTIONS======================== Default ====================================
F    Near-field scenario?      (Far-field)    NEAR-FIELD: narrowly-focused
T    Population dose?         (Individual)                release, single site
T    Acute release?             (Chronic)     FAR-FIELD:  wide-scale release,
     Average Individual data set used                     multiple sites
                                Complete                                  Complete
TRANSPORT OPTIONS============ Section   EXPOSURE PATHWAY OPTIONS===== Section
T  Air Transport                  1     F  Finite plume, external        5
F  Surface Water Transport        2     T  Infinite plume, external      5
F  Biotic Transport (near-field)  3     T  Ground, external              5
F  Waste Form Degradation (near)  4     F  Recreation, external          5
                                        T  Inhalation uptake             6
REPORT OPTIONS======================    F  Drinking water ingestion      7,8
T  Report AEDE only                     F  Aquatic foods ingestion       7,8
F  Report by radionuclide               T  Terrestrial foods ingestion   7,9
F  Report by exposure pathway           T  Animal product ingestion      7,10
F  Debug report on screen               F  Inadvertent soil ingestion

INVENTORY ##################################################################

 4   Inventory input activity units: (1-pCi  2-uCi  3-mCi  4-Ci  5-Bq)
 0   Surface soil source units (1- m2  2- m3  3- kg)
     Equilibrium question goes here
```

Use when	Release Terms — transport selected			Basic Concentrations — near-field scenario, optionally				
Release Radio-nuclide	Air /yr	Surface Water /yr	Buried Waste /m3	Air /L	Surface Soil /unit	Deep Soil /m3	Ground Water /L	Surface Water /L
SM153	2.8E-4							
EU154	6.8E-6							
EU155	7.0E-6							
EU156	7.8E-4							
CO60	1.2E-6							
CR51	2.9E-6							
FE59	2.5E-6							
FE55	3.0E-5							

Use when	Derived Concentrations — measured values are known			
Release Radio-nuclide	Terres. Plant /kg	Animal Product /kg	Drink Water /L	Aquatic Food /kg

```
TIME ##################################################################

1     Intake ends after (yr)
50    Dose calc. ends after (yr)
0     Release ends after (yr)
0     No. of years of air deposition prior to the intake period
0     No. of years of irrigation water deposition prior to the intake period

FAR-FIELD SCENARIOS (IF POPULATION DOSE) ##################################

2          Definition option: 1-Use population grid in file POP.IN
1                             2-Use total entered on this line

NEAR-FIELD SCENARIOS ######################################################

           Prior to the beginning of the intake period: (yr)
0            When was the inventory disposed?  (Package degradation starts)
0            When was LOIC?  (Biotic transport starts)
0          Fraction of roots in upper soil (top 15 cm)
0          Fraction of roots in deep soil
0          Manual redistribution: deep soil/surface soil dilution factor

TRANSPORT #################################################################
           ====AIR TRANSPORT=================================SECTION 1=====
                  0-Calculate PM
1          Option: 1-Use chi/Q or PM value   |F          Stack release (T/F)
                  2-Select MI dist & dir    |0          Stack height (m)
                  3-Specify MI dist & dir   |0          Stack flow (m3/sec
6.8E-3     Chi/Q or PM value                |0          Stack radius (m)
0          MI sector index (1=S)            |0          Effluent temp. (C)
0          MI distance from release point (m)
F          Use joint frequency data, otherwise chi/Q grid

           ====SURFACE WATER TRANSPORT=========================SECTION 2=====
0          Mixing ratio model: 0-use value, 1-river, 2-lake, 3-river flow
0          Mixing ratio, dimensionless
0          Average river flow rate for: MIXFLG=0,3 (m3/s), MIXFLG=1,2 (m/s),
0          Transit time to irrigation withdrawl location (hr)
           If mixing ratio model > 0:
0            Rate of effluent discharge to receiving water body (m3/s)
0            Longshore distance from release point to usage location (m)
0            Offshore distance to the water intake (m)
0            Average water depth in surface water body (m)
0            Average river width (m), MIXFLG=1 only
0            Depth of effluent discharge point to surface water (m), lake only

           ====WASTE FORM AVAILABILITY=========================SECTION 3=====
0          Waste form/package half life, (yr)
0          Waste thickness, (m)
0          Depth of soil overburden, m
```

EXHIBIT A.7. (contd)

```
            ====BIOTIC TRANSPORT OF BURIED SOURCE================SECTION 4=====
T           Consider during inventory decay/build-up period (T/F)?
T           Consider during intake period (T/F)?    | 1-Arid non agricultural
0           Pre-Intake site condition..............| 2-Humid non agricultural
                                                    | 3-Agricultural

EXPOSURE ##################################################################

            ====EXTERNAL EXPOSURE================================SECTION 5=====
            Exposure time:                  |  Residential irrigation:
0             Plume (hr)                    | T       Consider: (T/F)
2920.0        Soil contamination (hr)       | 0       Source: 1-ground water
0             Swimming (hr)                 |                 2-surface water
0             Boating (hr)                  | 0       Application rate (in/yr)
0             Shoreline activities (hr)     | 0       Duration (mo/yr)
0           Shoreline type: (1-river, 2-lake, 3-ocean, 4-tidal basin)
0           Transit time for release to reach aquatic recreation (hr)
1.0         Average fraction of time submersed in acute cloud (hr/person-hr)

            ====INHALATION=======================================SECTION 6=====
2920.0      Hours of exposure to contamination per year
0           0-No resus-  1-Use Mass Loading          2-Use Anspaugh model
0             pension      Mass loading factor (g/m3)   Top soil available (cm)

            ====INGESTION POPULATION=============================SECTION 7=====
 1          Atmospheric production definition (select option):
0             0-Use food-weighted chi/Q, (food-sec/m3), enter value on this line
              1-Use population-weighted chi/Q
              2-Use uniform production
              3-Use chi/Q and production grids (PRODUCTION will be overridden)
0           Population ingesting aquatic foods, 0 defaults to total (person)
0           Population ingesting drinking water, 0 defaults to total (person)
F           Consider dose from food exported out of region (default=F)

            Note below: S* or Source: 0-none, 1-ground water, 2-surface water
                                      3-Derived concentration entered above
            ==== AQUATIC FOODS / DRINKING WATER INGESTION=========SECTION 8====

F           Salt water? (default is fresh)

            USE        TRAN-  PROD-    -CONSUMPTION-  |
            ?   FOOD   SIT    UCTION   HOLDUP   RATE  |
            T/F TYPE   hr     kg/yr    da       kg/yr |      DRINKING WATER
            --- ------ -----  -------  ------   ----- |-------------------------
            F   FISH    0.00  0.0E+00   0.00     0.0  | 0      Source (see above)
            F   MOLLUS  0.00  0.0E+00   0.00     0.0  | T      Treatment? T/F
            F   CRUSTA  0.00  0.0E+00   0.00     0.0  | 0      Holdup/transit(da)
            F   PLANTS  0.00  0.0E+00   0.00     0.0  | 0      Consumption (L/yr)
```

EXHIBIT A.7. (contd)

====TERRESTRIAL FOOD INGESTION==========SECTION 9=====

USE ? T/F	FOOD TYPE	GROW TIME da	S *	--IRRIGATION-- RATE in/yr	TIME mo/yr	YIELD kg/m2	PROD-UCTION kg/yr	--CONSUMPTION-- HOLDUP da	RATE kg/yr
T	LEAF V	90.00	0	0.0	0.0	1.5	0.0E+00	14.0	15.0
T	ROOT V	90.00	0	0.0	0.0	4.0	0.0E+00	14.0	140.0
T	FRUIT	90.00	0	0.0	0.0	2.0	0.0E+00	14.0	64.0
T	GRAIN	90.00	0	0.0	0.0	0.8	0.0E+00	180.0	72.0

====ANIMAL PRODUCTION CONSUMPTION==========SECTION 10====

USE ? T/F	FOOD TYPE	---HUMAN---- CONSUMPTION RATE kg/yr	HOLDUP da	TOTAL PROD-UCTION kg/yr	DRINK WATER CONTAM FRACT.	----------STORED FEED---------- DIET FRAC-TION	GROW TIME da	-IRRIGATION-- S *	RATE in/yr	TIME mo/yr	YIELD kg/m3	STOR-AGE da
T	BEEF	70.0	34.0	0.00	0.00	0.00	90.0	0	0.0	0.00	0.80	0.0
T	POULTR	8.5	34.0	0.00	0.00	0.00	90.0	0	0.0	0.00	0.80	0.0
T	MILK	230.0	4.0	0.00	0.00	0.00	45.0	0	0.0	0.00	2.00	0.0
T	EGG	20.0	18.0	0.00	0.00	0.00	90.0	0	0.0	0.00	0.80	0.0
						----------FRESH FORAGE----------						
	BEEF					0.00	45.0	0	0.0	0.00	2.00	100.0
	MILK					0.00	30.0	0	0.0	0.00	1.50	0.0

##

EXHIBIT A.8. GENII Output File - Sample Problem 3

```
--------------------------------------------------------------------------------
                        GENII  Dose Calculation Program
                           (Version 1.351 30-Aug-88)

Case title:   GENII Sample Problem 3

Executed on:  09/28/88 at 14:36:46                                  Page A.  1
--------------------------------------------------------------------------------

          This is a far-field (wide-scale release, multiple site) scenario.
          Release is acute
          Dose to exposed population of  1.000E+00

          THE FOLLOWING TRANSPORT MODES ARE CONSIDERED
               Air

          THE FOLLOWING EXPOSURE PATHS ARE CONSIDERED:
               Infinite plume, external
               Ground, external
               Inhalation uptake
               Terrestrial foods ingestion
               Animal product ingestion

          THE FOLLOWING TIMES ARE USED:
               Intake ends after (yr):                  1.0
               Dose calculations ends after (yr):      50.0

========== FILE NAMES AND TITLES OF FILES/LIBRARIES USED =======================

                                        \genii\sam\sample3.in            9-28-88
 GENII Default Parameter Values (3-Aug-88 RAP)                           8-12-88
 RMDLIB - Radionuclide Master Library  (29-Aug-88 RAP)                   8-29-88
 Food Transfer Factor Library - (RAP  29-Aug-88) (UPDATED LEACHING FA    8-29-88
 External Dose Factors for GENII in person-Sv/yr per Bq/n (28-Aug-88     8-29-88
 Internal Yearly Dose Increments  (Sv/Bq)  29-Aug-88  RAP                8-29-88

================================================================================

          -------- ----Release Terms------
          Release          Surface Buried
          Radio-   Air     Water   Source
          nuclide   Ci/yr   Ci/yr   Ci/m3
          -------- ------- ------- -------
          SM153    2.8E-04 0.0E+00 0.0E+00
          EU154    6.8E-06 0.0E+00 0.0E+00
          EU155    7.0E-06 0.0E+00 0.0E+00
          EU156    7.8E-04 0.0E+00 0.0E+00
          CO60     1.2E-06 0.0E+00 0.0E+00
          CR51     2.9E-06 0.0E+00 0.0E+00
```

FE59	2.5E-06	0.0E+00	0.0E+00
FE55	3.0E-05	0.0E+00	0.0E+00

========== AIR TRANSPORT ==========

6.8E-03 Input population-weighted E/Q value (s/m3)

========== EXTERNAL EXPOSURE ==========

1.0E+00 Fraction of time spent in cloud
2.9E+03 Hours of exposure to ground contamination

========== INHALATION ==========

2.9E+03 Hours of exposure to contamination per year
Resuspension not considered

========== INGESTION POPULATION ==========

1 Atmospheric production definition: 1 - Use population-weighted chi/Q
Food production in region assumed to equal consumption.

========== TERRESTRIAL FOOD INGESTION ==========

FOOD TYPE	GROW TIME d	--IRRIGATION-- S *	RATE in/yr	TIME mo/yr	YIELD kg/m2	PROD-UCTION kg/yr	--CONSUMPTION-- HOLDUP d	RATE kg/yr
Leaf Veg	90.0	0	0.0	0.0	1.5		14.0	1.5E+01
Oth. Veg	90.0	0	0.0	0.0	4.0		14.0	1.4E+02
Fruit	90.0	0	0.0	0.0	2.0		14.0	6.4E+01
Cereals	90.0	0	0.0	0.0	0.8		180.0	7.2E+01

========== ANIMAL FOOD INGESTION ==========

FOOD TYPE	---HUMAN---- CONSUMPTION RATE kg/yr	HOLDUP d	TOTAL PROD-UCTION kg/yr	DRINK WATER CONTAM FRACT.	----------STORED FEED---------- DIET FRAC-TION	GROW TIME d	-IRRIGATION-- S *	RATE in/yr	TIME mo/yr	YIELD kg/m3	STOR-AGE d
Meat	7.0E+01	34.0		0.00		90.00	0	0.0	0.0	0.80	0.0
Poultry	8.5E+00	34.0		0.00		90.00	0	0.0	0.0	0.80	0.0
Cow Milk	2.3E+02	4.0		0.00		45.00	0	0.0	0.0	2.00	0.0
Eggs	2.0E+01	18.0		0.00		90.00	0	0.0	0.0	0.80	0.0
					----------FRESH FORAGE----------						
Meat						45.00	0	0.0	0.0	2.00	0.0
Cow Milk						30.00	0	0.0	0.0	1.50	0.0

EXHIBIT A.8. (contd)

Input prepared by: _____ Date: _____

Input checked by: _____ Date: _____

==========

GENII Dose Calculation Program
(Version 1.351 30-Aug-88)

Case title: Winter: GENII Sample Problem 3

Executed on: 09/28/88 at 14:39:30 Page C. 1

Acute release
Uptake/exposure period: 1.0
Dose commitment period: 50.0
Dose units: Person-rem

Organ	Committed Dose Equivalent	Weighting Factors	Weighted Dose Equivalent
Gonads	5.0E-06	2.5E-01	1.2E-06
Breast	3.7E-06	1.5E-01	5.5E-07
R Marrow	1.5E-05	1.2E-01	1.8E-06
Lung	1.4E-04	1.2E-01	1.7E-05
Thyroid	2.1E-06	3.0E-02	6.4E-08
Bone Sur	5.7E-05	3.0E-02	1.7E-06
LL Int.	7.3E-05	6.0E-02	4.4E-06
Liver	5.2E-05	6.0E-02	3.1E-06
UL Int.	2.9E-05	6.0E-02	1.7E-06
Kidneys	1.1E-05	6.0E-02	6.4E-07
S Int.	9.7E-06	6.0E-02	5.8E-07
Internal Effective Dose Equivalent			3.3E-05
External Dose			5.8E-06
Annual Effective Dose Equivalent			3.9E-05

Controlling Organ: Lung
Controlling Pathway: Inh
Controlling Radionuclide: EU156

Inhalation EDE: 3.3E-05
Ingestion EDE: 7.3E-09

EXHIBIT A.8. (contd)

GENII Dose Calculation Program
(Version 1.351 30-Aug-88)

Case title: Spring: GENII Sample Problem 3

Executed on: 09/28/88 at 14:40:32 Page C. 4

Acute release
Uptake/exposure period: 1.0
Dose commitment period: 50.0
Dose units: Person-rem

Organ	Committed Dose Equivalent	Weighting Factors	Weighted Dose Equivalent
Gonads	8.3E-06	2.5E-01	2.1E-06
Breast	4.3E-06	1.5E-01	6.4E-07
R Marrow	1.6E-05	1.2E-01	1.9E-06
Lung	1.4E-04	1.2E-01	1.7E-05
Thyroid	2.4E-06	3.0E-02	7.2E-08
Bone Sur	5.8E-05	3.0E-02	1.7E-06
LL Int.	1.3E-04	6.0E-02	7.7E-06
Liver	5.4E-05	6.0E-02	3.2E-06
UL Int.	5.0E-05	6.0E-02	3.0E-06
S Int.	1.6E-05	6.0E-02	9.5E-07
Kidneys	1.1E-05	6.0E-02	6.6E-07

Internal Effective Dose Equivalent	3.9E-05
External Dose	5.8E-06
Annual Effective Dose Equivalent	4.5E-05

Controlling Organ:	Lung
Controlling Pathway:	Inh
Controlling Radionuclide:	EU156
Inhalation EDE:	3.3E-05
Ingestion EDE:	6.3E-06

GENII Dose Calculation Program
(Version 1.351 30-Aug-88)

Case title: Summer: GENII Sample Problem 3

Executed on: 09/28/88 at 14:41:32 Page C. 7

Acute release
Uptake/exposure period: 1.0
Dose commitment period: 50.0
Dose units: Person-rem

Organ	Committed Dose Equivalent	Weighting Factors	Weighted Dose Equivalent
Gonads	1.0E-05	2.5E-01	2.5E-06
Breast	4.8E-06	1.5E-01	7.1E-07
R Marrow	1.7E-05	1.2E-01	2.0E-06
Lung	1.4E-04	1.2E-01	1.7E-05
Thyroid	2.7E-06	3.0E-02	8.2E-08
Bone Sur	6.1E-05	3.0E-02	1.8E-06
LL Int.	1.5E-04	6.0E-02	9.2E-06
UL Int.	5.9E-05	6.0E-02	3.5E-06
Liver	5.7E-05	6.0E-02	3.4E-06
S Int.	1.9E-05	6.0E-02	1.1E-06
Kidneys	1.1E-05	6.0E-02	6.8E-07
Internal Effective Dose Equivalent			4.2E-05
External Dose			5.8E-06
Annual Effective Dose Equivalent			4.8E-05

Controlling Organ: LL Int.
Controlling Pathway: Inh
Controlling Radionuclide: EU156

Inhalation EDE: 3.3E-05
Ingestion EDE: 9.5E-06

EXHIBIT A.8. (contd)

GENII Dose Calculation Program
(Version 1.351 30-Aug-88)

Case title: Autumn: GENII Sample Problem 3

Executed on: 09/28/88 at 14:42:32 Page C. 10

Acute release
Uptake/exposure period: 1.0
Dose commitment period: 50.0
Dose units: Person-rem

Organ	Committed Dose Equivalent	Weighting Factors	Weighted Dose Equivalent
Gonads	3.0E-05	2.5E-01	7.6E-06
Breast	1.1E-05	1.5E-01	1.6E-06
R Marrow	2.7E-05	1.2E-01	3.2E-06
Lung	1.5E-04	1.2E-01	1.8E-05
Thyroid	7.1E-06	3.0E-02	2.1E-07
Bone Sur	8.3E-05	3.0E-02	2.5E-06
LL Int.	4.0E-04	6.0E-02	2.4E-05
UL Int.	1.5E-04	6.0E-02	9.3E-06
Liver	8.4E-05	6.0E-02	5.0E-06
S Int.	5.0E-05	6.0E-02	3.0E-06
Stomach	2.3E-05	6.0E-02	1.4E-06
Internal Effective Dose Equivalent			7.6E-05
External Dose			5.8E-06
Annual Effective Dose Equivalent			8.1E-05

Controlling Organ: LL Int.
Controlling Pathway: Ing
Controlling Radionuclide: EU156

Inhalation EDE: 3.3E-05
Ingestion EDE: 4.3E-05

EXHIBIT A.9. GENII MEDIA.OUT Putput File Sample Problem 3

GENII Dose Calculation Program
(Version 1.351 30-Aug-88)

Case title: GENII Sample Problem Three

Executed on: 09/28/88 at 14:37:35 Page 2

Radio-nuclide	Season or Year	Residential Average Population-Weighted Air Ci sec/m3	Residential Surface Soil Ci/m2	Time Integrated Surface Water Ci yr/L
CR51	Winter	2.0E-08	2.2E-12	0.0E+00
CR51	Spring	2.0E-08	2.2E-12	0.0E+00
CR51	Summer	2.0E-08	2.2E-12	0.0E+00
CR51	Autumn	2.0E-08	2.2E-12	0.0E+00
FE55	Winter	2.0E-07	1.8E-10	0.0E+00
FE55	Spring	2.0E-07	1.8E-10	0.0E+00
FE55	Summer	2.0E-07	1.8E-10	0.0E+00
FE55	Autumn	2.0E-07	1.8E-10	0.0E+00
FE59	Winter	1.7E-08	3.0E-12	0.0E+00
FE59	Spring	1.7E-08	3.0E-12	0.0E+00
FE59	Summer	1.7E-08	3.0E-12	0.0E+00
FE59	Autumn	1.7E-08	3.0E-12	0.0E+00
CO60	Winter	8.2E-09	7.6E-12	0.0E+00
CO60	Spring	8.2E-09	7.6E-12	0.0E+00
CO60	Summer	8.2E-09	7.6E-12	0.0E+00
CO60	Autumn	8.2E-09	7.6E-12	0.0E+00
SM153	Winter	1.9E-06	1.5E-11	0.0E+00
SM153	Spring	1.9E-06	1.5E-11	0.0E+00
SM153	Summer	1.9E-06	1.5E-11	0.0E+00
SM153	Autumn	1.9E-06	1.5E-11	0.0E+00
EU154	Winter	4.6E-08	4.4E-11	0.0E+00
EU154	Spring	4.6E-08	4.4E-11	0.0E+00
EU154	Summer	4.6E-08	4.4E-11	0.0E+00
EU154	Autumn	4.6E-08	4.4E-11	0.0E+00
EU155	Winter	4.8E-08	4.4E-11	0.0E+00
EU155	Spring	4.8E-08	4.4E-11	0.0E+00
EU155	Summer	4.8E-08	4.4E-11	0.0E+00
EU155	Autumn	4.8E-08	4.4E-11	0.0E+00
EU156	Winter	5.3E-06	3.2E-10	0.0E+00
EU156	Spring	5.3E-06	3.2E-10	0.0E+00
EU156	Summer	5.3E-06	3.2E-10	0.0E+00
EU156	Autumn	5.3E-06	3.2E-10	0.0E+00

Scenarios of this nature are frequently used in environmental impact statements involving waste disposal.

The input for this scenario is contained in the GENII input file. The input is shown in Exhibit A.10. The resulting output is presented in Exhibit A.11.

The initial pages define the scenario and repeat the input. No atmospheric dispersion calculations were performed, so no pages labeled B.n were produced. As for the other GENII samples, an effective dose equivalent summary page and a dose assembly matrix page were printed but omitted from this output to conserve space. Dose by exposure pathway is presented on page C.3 and dose by radionuclide on page C.4. The format of these pages is similar to that of the outputs of the other sample problems.

Note that for the scenario defined, no terrestrial food pathways or animal products were used. Therefore, no mention is made of these on the quality assurance pages.

A.5 INTDF SAMPLE PROBLEM

The INTDF code is used to prepare internal radiation dose factors for the other codes of the GENII package. Input is quite simple. The sample input file shown in Exhibit A.12 demonstrates the calculation of the 50-year dose commitments for the organs defined to be exposed from a single inhalation or ingestion intake of cobalt-60. Other radionuclides could be added to the calculation simply by appending them to the end of this file.

The output file resulting from the input of Exhibit A.12 is presented in Exhibit A.13. The first page of this file defines the input conditions and lists the metabolic data retrieved from the metabolic data library. If the DEBUG flag had been set TRUE in the input file, an additional set of pages displaying the specific effective energies (SEE) used in the dose calculation would have also been printed. The last page presents the total integrated retention (total number of disintegrations of cobalt-60 in each organ) and the calculated organ dose commitments. These numbers may be compared to those published by the ICRP in Publication 30 (ICRP 1979).

EXHIBIT A.10. GENII Input File -Sample Problem 4

```
######################### Program GENII Input File ############ 22 Apr 88 ####
Title: GENII Sample Problem 4
       \genii\sam\sample4.inN                    Created on 08-05-1988 at 16:03
OPTIONS======================== Default ====================================
T    Near-field scenario?       (Far-field)    NEAR-FIELD: narrowly-focused
F    Population dose?          (Individual)                release, single site
F    Acute release?              (Chronic)     FAR-FIELD:  wide-scale release,
     Maximum Individual data set used                      multiple sites
                                Complete                                   Complete
TRANSPORT OPTIONS============ Section   EXPOSURE PATHWAY OPTIONS===== Section
F  Air Transport                  1     F  Finite plume, external        5
F  Surface Water Transport        2     T  Infinite plume, external      5
F  Biotic Transport (near-field)  3,4   T  Ground, external              5
F  Waste Form Degradation (near)  3,4   F  Recreation, external          5
                                        T  Inhalation uptake             6
REPORT OPTIONS======================    F  Drinking water ingestion      7,8
T  Report AEDE only                     F  Aquatic foods ingestion       7,8
F  Report by radionuclide               F  Terrestrial foods ingestion   7,9
T  Report by exposure pathway           F  Animal product ingestion      7,10
F  Debug report on screen               F  Inadvertent soil ingestion

INVENTORY ##################################################################

 1   Inventory input activity units: (1-pCi  2-uCi  3-mCi  4-Ci  5-Bq)
 1   Surface soil source units (1- m2  2- m3  3- kg)
     Equilibrium question goes here
```

Use when	Release Terms transport selected			Basic Concentrations near-field scenario, optionally				
Release Radio-nuclide	Air /yr	Surface Water /yr	Buried Waste /m3	Air /L	Surface Soil /unit	Deep Soil /m3	Ground Water /L	Surface Water /L
CO60						2.14E12		
NI59						9.29E10		
NI63						1.21E13		
SR90						2.14E09		
ZR93						7.86E10		
NB94						4.29E09		
MO93						1.43E09		
TC99						2.14E08		
EU152						1.43E10		
EU154						1.14E10		

EXHIBIT A.10. (contd)

```
--------|----Derived Concentrations-----|
Use when|   measured values are known   |
--------|-------------------------------|
Release |Terres. Animal  Drink   Aquatic|
Radio-  |Plant   Product Water   Food   |
nuclide |/kg     /kg     /L      /kg    |
--------|------- ------- ------- -------|


TIME ##################################################################

1     Intake ends after (yr)
50    Dose calc. ends after (yr)
0     Release ends after (yr)
0     No. of years of air deposition prior to the intake period
0     No. of years of irrigation water deposition prior to the intake period

FAR-FIELD SCENARIOS (IF POPULATION DOSE) ##################################

0           Definition option: 1-Use population grid in file POP.IN
0                              2-Use total entered on this line

NEAR-FIELD SCENARIOS ######################################################

            Prior to the beginning of the intake period: (yr)
100.0         When was the inventory disposed?  (Package degradation starts)
0             When was LOIC?  (Biotic transport starts)
1.0         Fraction of roots in upper soil (top 15 cm)
0           Fraction of roots in deep soil
2.8E-3      Manual redistribution: deep soil/surface soil dilution factor
1000.0      Source area for external dose modification factor (m2)
TRANSPORT ################################################################
            ====AIR TRANSPORT=================================SECTION 1=====
                    0-Calculate PM                |
 1          Option: 1-Use chi/Q or PM value      |F          Stack release (T/F)
                    2-Select MI dist & dir       |0          Stack height (m)
                    3-Specify MI dist & dir      |0          Stack flow (m3/sec
0           Chi/Q or PM value                    |0          Stack radius (m)
0           MI sector index (1=S)                |0          Effluent temp. (C)
0           MI distance from release point (m)
T           Use joint frequency data, otherwise chi/Q grid

            ====SURFACE WATER TRANSPORT=========================SECTION 2=====
0           Mixing ratio model: 0-use value, 1-river, 2-lake
0           Mixing ratio, dimensionless
0           Average river flow rate for: MIXFLG=0 (m3/s), MIXFLG=1,2 (m/s),
0           Transit time to irrigation withdrawl location (hr)
            If mixing ratio model > 0:
0             Rate of effluent discharge to receiving water body (m3/s)
0             Longshore distance from release point to usage location (m)
```

```
0          Offshore distance to the water intake (m)
0          Average water depth in surface water body (m)
0          Average river width (m), MIXFLG=1 only
0          Depth of effluent discharge point to surface water (m), lake only

         ====WASTE FORM AVAILABILITY=========================SECTION 3=====
0        Waste form/package half life, (yr)
10.0     Waste thickness, (m)
5.0      Depth of soil overburden, m

         ====BIOTIC TRANSPORT OF BURIED SOURCE===============SECTION 4=====
T        Consider during inventory decay/build-up period (T/F)?
T        Consider during intake period (T/F)?   | 1-Arid non agricultural
0        Pre-Intake site condition..............| 2-Humid non agricultural
                                                | 3-Agricultural

EXPOSURE ##################################################################

         ====EXTERNAL EXPOSURE===============================SECTION 5=====
         Exposure time:                | Residential irrigation:
1.0        Plume (hr)                  | T       Consider: (T/F)
40.0       Soil contamination (hr)     | 0       Source: 1-ground water
0          Swimming (hr)               |                 2-surface water
0          Boating (hr)                | 0       Application rate (in/yr)
0          Shoreline activities (hr)   | 0       Duration (mo/yr)
0        Shoreline type: (1-river, 2-lake, 3-ocean, 4-tidal basin)
0        Transit time for release to reach aquatic recreation (hr)
0        Average fraction of time submersed in acute cloud (hr/person-hr)

         ====INHALATION======================================SECTION 6=====
1.0      Hours of exposure to contamination per year
1        0-No resus-  1-Use Mass Loading          2-Use Anspaugh model
.0001      pension      Mass loading factor (g/m3)   Top soil available (cm)

         ====INGESTION POPULATION============================SECTION 7=====
0        Atmospheric production definition (select option):
0          0-Use food-weighted chi/Q, (food-sec/m3), enter value on this line
           1-Use population-weighted chi/Q
           2-Use uniform production
           3-Use chi/Q and production grids (PRODUCTION will be overridden)
0        Population ingesting aquatic foods, 0 defaults to total (person)
0        Population ingesting drinking water, 0 defaults to total (person)
F        Consider dose from food exported out of region (default=F)

         Note below: S* or Source: 0-none, 1-ground water, 2-surface water
                                   3-Derived concentration entered above
         ==== AQUATIC FOODS / DRINKING WATER INGESTION=========SECTION 8====

F        Salt water? (default is fresh)
```

EXHIBIT A.10. (contd)

USE ? T/F	FOOD TYPE	TRAN-SIT hr	PROD-UCTION kg/yr	-CONSUMPTION- HOLDUP da	RATE kg/yr	DRINKING WATER	
F	FISH	0.00	0.0E+00	0.00	0.0	0	Source (see above)
F	MOLLUS	0.00	0.0E+00	0.00	0.0	T	Treatment? T/F
F	CRUSTA	0.00	0.0E+00	0.00	0.0	0	Holdup/transit(da)
F	PLANTS	0.00	0.0E+00	0.00	0.0	0	Consumption (L/yr)

====TERRESTRIAL FOOD INGESTION==========SECTION 9=====

USE ? T/F	FOOD TYPE	GROW TIME da	--IRRIGATION-- S *	RATE in/yr	TIME mo/yr	YIELD kg/m2	PROD-UCTION kg/yr	--CONSUMPTION-- HOLDUP da	RATE kg/yr
F	LEAF V	90.00	0	0.0	0.0	1.5	0.0E+00	1.0	30.0
F	ROOT V	90.00	0	0.0	0.0	4.0	0.0E+00	5.0	220.0
F	FRUIT	90.00	0	0.0	0.0	2.0	0.0E+00	5.0	330.0
F	GRAIN	90.00	0	0.0	0.0	0.8	0.0E+00	180.0	80.0

====ANIMAL PRODUCTION CONSUMPTION==========SECTION 10====

USE ? T/F	FOOD TYPE	---HUMAN---- CONSUMPTION RATE kg/yr	HOLDUP da	TOTAL PROD-UCTION kg/yr	DRINK WATER CONTAM FRACT.	DIET FRAC-TION	GROW TIME da	-IRRIGATION-- S *	RATE in/yr	TIME mo/yr	YIELD kg/m3	STOR-AGE da
						----------STORED FEED----------						
F	BEEF	80.0	15.0	0.00	0.00	0.25	90.0	0	0.0	0.00	0.80	180.0
F	POULTR	18.0	1.0	0.00	0.00	1.00	90.0	0	0.0	0.00	0.80	180.0
F	MILK	270.0	1.0	0.00	0.00	0.25	45.0	0	0.0	0.00	2.00	100.0
F	EGG	30.0	1.0	0.00	0.00	1.00	90.0	0	0.0	0.00	0.80	180.0
						----------FRESH FORAGE----------						
	BEEF					0.75	45.0	0	0.0	0.00	2.00	100.0
	MILK					0.75	30.0	0	0.0	0.00	1.50	0.0

##

EXHIBIT A.11. GENII Output File - Sample Problem 4

```
-----------------------------------------------------------------------------
                        GENII  Dose Calculation Program
                           (Version 1.351 30-Aug-88)

Case title:   GENII Sample Problem 4

Executed on:  09/27/88 at 17:09:09                                  Page A.  1
-----------------------------------------------------------------------------

          This is a near field (narrowly-focused, single site) scenario.
          Release is chronic
          Individual dose

          THE FOLLOWING EXPOSURE PATHS ARE CONSIDERED:
               Infinite plume, external
               Ground, external
               Inhalation uptake

          THE FOLLOWING TIMES ARE USED:
               Intake ends after (yr):                 1.0
               Dose calculations ends after (yr):     50.0

========== FILE NAMES AND TITLES OF FILES/LIBRARIES USED =======================

                                        \genii\sam\sample4.inN          8-05-88
GENII Default Parameter Values (3-Aug-88 RAP)                           8-12-88
RMDLIB - Radionuclide Master Library  (29-Aug-88 RAP)                   8-29-88
External Dose Factors for GENII in person-Sv/yr per Bq/n (28-Aug-88     8-29-88
Internal Yearly Dose Increments  (Sv/Bq)  29-Aug-88  RAP                8-29-88

=============================================================================
 1        Surface soil input unit: (1-m2, 2-m3, 3-kg)

          -------- ----------Basic Concentrations---------
          Release                Surface Deep    Ground  Surface
          Radio-   Air           Soil    Soil    Water   Water
          nuclide  pCi/L         pCi/m2  pCi/m3  pCi/L   pCi/L
          -------- -------       ------- ------- ------- -------
          CO60     0.0E+00       0.0E+00 2.1E+12 0.0E+00 0.0E+00
          NI59     0.0E+00       0.0E+00 9.3E+10 0.0E+00 0.0E+00
          NI63     0.0E+00       0.0E+00 1.2E+13 0.0E+00 0.0E+00
          SR90     0.0E+00       0.0E+00 2.1E+09 0.0E+00 0.0E+00
          ZR93     0.0E+00       0.0E+00 7.9E+10 0.0E+00 0.0E+00
          NB94     0.0E+00       0.0E+00 4.3E+09 0.0E+00 0.0E+00
          MO93     0.0E+00       0.0E+00 1.4E+09 0.0E+00 0.0E+00
          TC99     0.0E+00       0.0E+00 2.1E+08 0.0E+00 0.0E+00
          EU152    0.0E+00       0.0E+00 1.4E+10 0.0E+00 0.0E+00
          EU154    0.0E+00       0.0E+00 1.1E+10 0.0E+00 0.0E+00
```

EXHIBIT A.11. (contd)

```
========== NEAR-FIELD PARAMETERS ==============================================
  100.0    Inventory disposed n years prior to beginning of intake period
      0    LOIC occurred n years prior to beginning of intake period
1.0E+00    Fraction of roots in upper soil (top 15 cm)
0.0E+00    Fraction of roots in deep soil
2.8E-03    Manual redistribution: deep soil/surface soil dilution factor
 1000.0    Source area for external dose modification factor (m2)

========== WASTE FORM AVAILABILITY ============================================
0.0E+00    Waste form/package half life, yr
1.0E+01    Thickness of buried waste, m
5.0E+00    Depth of soil overburden, m

========== EXTERNAL EXPOSURE ==================================================
 1.0E+00   Hours of exposure to plume
 4.0E+01   Hours of exposure to ground contamination

========== INHALATION =========================================================
 1.0E+00   Hours of exposure to contamination per year
       1   Resuspension model:  1-Mass Loading, 2-Anspaugh
 1.0E-04   Mass loading factor (g/m3)

================================================================================
```

Input prepared by: _____ Date: _____

Input checked by: _____ Date: _____

```
================================================================================
Source area external dose modification factor:    0.940000
```

GENII Dose Calculation Program
(Version 1.351 30-Aug-88)

Case title: GENII Sample Problem 4

Executed on: 09/27/88 at 17:11:20 Page C. 3

Uptake/exposure period: 1.0
Dose commitment period: 50.0
Dose units: Rem

Committed Dose Equivalent by Exposure Pathway

Pathway	Lung	Stomach	S Int.	UL Int.	LL Int.	Bone Su	R Marro	Testes
Inhale	1.1E-07	4.4E-09	4.3E-09	6.9E-09	1.5E-08	2.0E-07	2.2E-08	6.5E-09
Total	1.1E-07	4.4E-09	4.3E-09	6.9E-09	1.5E-08	2.0E-07	2.2E-08	6.5E-09

Pathway	Ovaries	Muscle	Thyroid	Kidneys	Liver	Spleen	S Wall
Inhale	6.8E-09	6.9E-09	6.9E-09	3.7E-10	1.4E-10	7.4E-10	9.0E-13
Total	6.8E-09	6.9E-09	6.9E-09	3.7E-10	1.4E-10	7.4E-10	9.0E-13

External Dose by Exposure Pathway

Pathway	
Plume	0.0E+00
Sur Soil	1.9E-03
Dep Soil	1.7E-07
Total	1.9E-03

EXHIBIT A.11. (contd)

GENII Dose Calculation Program
(Version 1.351 30-Aug-88)

Case title: GENII Sample Problem 4

Executed on: 09/27/88 at 17:11:20 Page C. 4

Uptake/exposure period: 1.0
Dose commitment period: 50.0
Dose units: Rem

Radio-nuclide	Inhalation Effective Dose Equivalent	Ingestion Effective Dose Equivalent	External Dose	Internal Effective Dose Equivalent	Annual Effective Dose Equivalent
CO 60	9.2E-13	0.0E+00	2.6E-06	9.2E-13	2.6E-06
NI 59	8.9E-11	0.0E+00	1.1E-06	8.9E-11	1.1E-06
NI 63	1.4E-08	0.0E+00	1.0E-07	1.4E-08	1.1E-07
SR 90	4.5E-11	0.0E+00	5.8E-09	4.5E-11	5.8E-09
Y 90	1.9E-12	0.0E+00	3.2E-07	1.9E-12	3.2E-07
MO 93	7.4E-13	0.0E+00	1.4E-08	7.4E-13	1.4E-08
ZR 93	7.8E-09	0.0E+00	9.3E-10	7.8E-09	8.7E-09
NB 93M	2.9E-09	0.0E+00	3.7E-07	2.9E-09	3.7E-07
NB 94	2.0E-09	0.0E+00	1.8E-03	2.0E-09	1.8E-03
TC 99	1.0E-12	0.0E+00	4.1E-10	1.0E-12	4.1E-10
EU 152	2.1E-11	0.0E+00	2.8E-05	2.1E-11	2.8E-05
EU 154	1.4E-12	0.0E+00	1.4E-06	1.4E-12	1.4E-06

EXHIBIT A.12. GENII Input File - Problem 5

```
GENII Sample Problem 5 (INTDF)
50          'No. of years to consider
T           'Acute? if false then chronic
1.0         'Particle size, micron
F           'Print SEE's and Debug print statements?
1.0-6       'Relative error tolerance (LSODES2)
1.0-8       'Absolute error tolerance (LSODES2)
365.0       'Absolute step size allowed (LSODES2)
1.0-6       'Initial step size (LSODES2)
700         'Number of steps to reach convergence allowed (LSODES2)
F           10.0          'Fetal dose, age (da)
C060
```

EXHIBIT A.13. GENII Output File - Sample Problem 5

```
-----------------------------------------------------------------------------
                        INTDF  Dose Calculation Program
                           (Version 1.351 30-Aug-88)

 Case title:   GENII Sample Problem 5 (INTDF)
 Executed on:  09/27/88 at 17:12:04                                  Page     1
-----------------------------------------------------------------------------

1 CO60          V Y 1.92E+03 3.61E-04 0 0.00E+00 0 0.00E+00

                                          General Model
                                          Acute exposure

Dose commitment period:                    50.0000

Particle size:                             1.00000
Lung deposition fractions:
  Nasal-pharynx region:                   0.287834
  Pulmonary region:                       0.235379
  Traecheo-bronchial region:              0.800000E-01

Integration method:                       LSODES2 equation solver
Relative error tolerance:                 0.100000E-05
Absolute error tolerance:                 0.100000E-07
Absolute step size allowed:                365.000
No. of steps to convergence allowed:           700
Starting time step:                       0.100000E-05
```

Organ	Organ Index	Target?	Compartment Index	Organ Mass	ORGMLT	ORGING	ORGINH
Lung	1	T	18	1.0E+03	1.0E+00	1.5E-02	0.0E+00
Lymph	2	F	19	0.0E+00	1.0E+00	0.0E+00	0.0E+00
Stomach	3	T	20	2.5E+02	1.0E+00	0.0E+00	0.0E+00
S Int.	4	T	21	4.0E+02	1.0E+00	0.0E+00	0.0E+00
UL Int.	5	T	22	2.5E+02	1.0E+00	0.0E+00	0.0E+00
LL Int.	6	T	23	1.3E+02	1.0E+00	0.0E+00	0.0E+00
Bone Sur	7	T	24	0.0E+00	0.0E+00	0.0E+00	0.0E+00
R Marrow	8	T	24	1.5E+03	0.0E+00	2.2E-02	2.3E-02
Bone Cor	9	F	24	4.0E+03	8.0E-01	0.0E+00	0.0E+00
Bone Can	10	F	24	1.0E+03	2.0E-01	0.0E+00	0.0E+00
Testes	11	T	25	3.5E+01	0.0E+00	5.2E-04	5.3E-04
Ovaries	12	T	25	1.1E+01	0.0E+00	1.6E-04	1.7E-04
Muscle	13	T	25	2.8E+04	0.0E+00	4.2E-01	4.2E-01
Thyroid	14	T	25	2.0E+01	0.0E+00	3.0E-04	3.0E-04
Liver	17	T	26	1.8E+03	1.0E+00	0.0E+00	0.0E+00
Other	23	T	25	0.0E+00	0.0E+00	5.4E-01	5.5E-01

Transfer compartment rate: 1.39000

EXHIBIT A.13. (contd)

INTDF Dose Calculation Program
(Version 1.351 30-Aug-88)

Case title: GENII Sample Problem Five (INTDF)

Executed on: 09/27/88 at 17:12:04 Page 2

No. of OTHER compartments (TCMULT): 3 0.958913

TC, RT:	1	0.270000	0.115517
TC, RT:	2	0.900000E-01	0.115517E-01
TC, RT:	3	0.900000E-01	0.866375E-03

No. of bone compartments (TCMULT): 0 0.724638E-01

No. of specified organs (TCMULT): 1 2.61E-02

No. of specified organ compartments: 3

Organ Name	Comp. Index	Organ Index	Sub Index	TCORG (frac)	RTORG (rate)
Liver	1	1	1	0.30E-01	0.12E+00
Liver	2	1	2	0.10E-01	0.12E-01
Liver	3	1	3	0.10E-01	0.87E-03

Input prepared by: _____ Date: _____

Input checked by: _____ Date: _____

EXHIBIT A.13. (contd)

INTDF Dose Calculation Program
(Version 1.351 30-Aug-88)

Case title: GENII Sample Problem 5 (INTDF)

Executed on: 09/27/88 at 17:12:04 Page 3

Number of Nuclear Transformation Over 50 Years
In Source Organs or Tissue per Unit Intake of Activity
(Transformations/Bq) of C060

Inhalation Class Y
F1: 5.0E-02

Oral

	C060
Lung	0.0E+00
Stomach	3.6E+03
S Int.	1.4E+04
UL Int.	4.4E+04
LL Int.	8.2E+04
Bone	2.3E+02
Other	3.6E+05
Liver	4.0E+04

Inhalation

	C060
Lung	9.7E+06
Stomach	1.9E+03
S Int.	7.3E+03
UL Int.	2.4E+04
LL Int.	4.4E+04
Bone	2.5E+02
Other	4.1E+05
Liver	4.5E+04

Committed Dose Equivalent Over 50 Years
In Target Organs or Tissue per Unit Intake of Activity
(Sv/Bq) of C060

	Lung	Stomach	S Int.	UL Int.	LL Int.	Bone Sur	R Marrow
Oral	8.7E-10	1.5E-09	3.5E-09	5.6E-09	1.1E-08	8.4E-10	1.3E-09
Inhalation	3.3E-07	2.6E-08	6.7E-09	9.0E-09	7.6E-09	1.3E-08	1.6E-08

	Testes	Ovaries	Muscle	Thyroid	Liver
Oral	1.2E-09	3.1E-09	1.1E-09	8.3E-10	2.4E-09
Inhalation	1.7E-09	4.6E-09	1.7E-08	1.5E-08	3.2E-08

EXHIBIT A.13. (contd)

	Oral	Inhalation
Number of steps taken by the LSODES solver:	347	339
Number of F (DIFEQ2) evaulations:	453	469
Number of Jacobian evaluations:	7	7
Length of RWORK actually required:	964	998
Length of IWORK actually required:	30	30
Number of non-zero elements in Jacobian matrix:	82	93

A.6 EXTDF SAMPLE PROBLEM

The EXTDF code is used to prepare data files of external dose rate factors for use by the other codes of the GENII package. The input is quite short. No radionuclides need to be specified because the code reads the radionuclide master data file RMDLIB and calculates factors for every nuclide in the list. The input to this sample problem is shown in Exhibit A.14. The geometry demonstrated in Exhibit A.14 is an infinite slab source one meter thick with a 15-cm overburden. The dose point of interest is one meter above the surface of the covering overburden.

Output from the example calculation is given in Exhibit 15. The output defines the nature and composition of the various shield layers, provides information on the selected shield thicknesses and geometry, and provides limited information on the build-up factors used in the calculations. The column of radionuclides and associated dose rate factors is purposely formatted in this fashion to ease editing incorporation into the GENII system data files. This structure is compatible with the GENII file GRDF.DAT. The units displayed are selected using the IEXTU parameter illustrated in Exhibit A.14. Selection of this parameter must be appropriate to the geometry chosen. The user is referred to the input instructions.

A.7 DITTY SAMPLE PROBLEM

The DITTY sample problem represents the most common use of DITTY; the calculation of long-term population dose to a downstream population from a time-varying release to surface water. The input file for Sample Problem 7 is presented as Exhibit A.16. The waterborne release is given in terms of curies/year released into the river. The input of the source to the river is selected in this example to be via an input file copied into the input buffer WATREL.DAT. This file is presented as Exhibit A.17. The sample input file of Exhibit A.17 contains data for three radionuclides as a series of time/release quantity pairs. Because the parameter TZR is not set in the DITTY input file, the times in the WATREL file are assumed to be years since the start of the release in the year 2000 A.D.

EXHIBIT A.14. GENII Input File - Sample Problem 6

```
GENII Sample Problem 6 (EXTDF)
 &INPUT
  JBUF = 1,
  IGEOM=5,
  IEXTU = 3,
  ANG1 = 90.0, NSHLD=3,
  X = 215.,
  T =      100.0,  15.0,  100.0,
 &END
0   16       1.8    0.0    0.0   0.0    0.0
0   16       0.0    1.8    0.0   0.0    0.0
1    3       0.0    0.0 .00129   0.0    0.0
```

EXHIBIT A.15. GENII Output File - Problem 6

```
--------------------------------------------------------------------------------
                        EXTDF  Dose Calculation Program
                           (Version 1.351 30-Aug-88)

Case title:   GENII Sample Problem 6 (EXTDF)

Executed on:  09/27/88 at 17:20:15                                   Page     1
--------------------------------------------------------------------------------

Shield composition (gm/cc):
                  1        2        3        4        5
ORDCONC       1.8E+00  0.0E+00  0.0E+00  0.0E+00  0.0E+00
ORDCONC       0.0E+00  1.8E+00  0.0E+00  0.0E+00  0.0E+00
AIR           0.0E+00  0.0E+00  1.3E-03  0.0E+00  0.0E+00

Shield thickness (cm):
              1.0E+02  1.5E+01  1.0E+02

Geometry index:                                                    5
INFINITE SLAB source
SLAB shield
Distance to detector:                                        2.150E+02 cm
Angle:                                                         0.0 degrees
Source thickness:                                              100.00 cm
Taylor build-up data for shield:                                   1
 with effective atomic number:                                    10.0

================================================================================


Input prepared by:  ____________________________          Date:  ____________

Input checked by:   ____________________________          Date:  ____________


================================================================================

Units are person-Sv/yr per Bq/m3 (GENII)

H 3      0.00E+00
BE10     1.66E-15
C 14     8.89E-19
N 13     9.53E-11
F 18     9.23E-11
NA22     2.77E-10
NA24     1.07E-09
SI31     2.32E-13
P 32     1.56E-13
```

P 33	2.12E-17
S 35	1.31E-18
CL36	5.16E-15
K 40	2.87E-11
AR39	1.71E-15
AR41	1.90E-10
CA41	0.00E+00
CA45	2.40E-17
SC46	2.83E-10
CR51	2.43E-12
MN54	9.20E-11
MN56	3.27E-10
FE55	0.00E+00
FE59	1.73E-10
CO57	7.80E-13
CO58	1.08E-10
CO60	3.83E-10
NI59	0.00E+00
NI63	6.96E-24
NI65	9.62E-11
CU64	1.80E-11
ZN65	9.85E-11
ZN69M	4.53E-11
ZN69	1.45E-14
GA72	5.28E-10
AS76	5.68E-11
SE75	1.17E-11
SE79	5.17E-19
BR82	3.36E-10
BR83	6.85E-13
KR83M	8.11E-26
BR84	4.29E-10
KR85M	4.00E-12
KR85	2.11E-13
KR87	1.72E-10
RB87	3.08E-17
KR88	4.44E-10
RB88	1.57E-10
KR89	3.89E-10
RB89	4.04E-10
SR89	1.14E-13
SR87M	2.03E-11
RB86	1.41E-11
SR85	4.74E-11
SR90	1.28E-15
Y 90	3.83E-13
SR91	8.95E-11
Y 91M	5.96E-11
Y 91	6.76E-13
SR92	2.55E-10

EXHIBIT A.15. (contd)

Y 92	4.41E-11
Y 93	1.62E-11
MO93	0.00E+00
ZR93	1.35E-24
NB93M	0.00E+00
ZR95	7.83E-11
NB95M	1.59E-12
NB95	9.19E-11
ZR97	2.64E-11
NB97M	6.14E-11
NB97	6.44E-11
NB94	1.55E-10
MO99	1.29E-11
TC99M	6.18E-13
TC99	4.52E-17
TC101	2.77E-11
RU103	4.67E-11
PD103	7.62E-15
RH103M	1.13E-25
RU105	7.20E-11
RH105	6.03E-12
RU106	2.36E-11
PD107	0.00E+00
PD109	8.98E-14
AG110M	3.54E-10
AG111	1.78E-12
CD109	0.00E+00
CD113M	1.76E-15
CD115M	3.61E-12
CD115	1.82E-11
IN115M	1.16E-11
IN111	6.56E-12
IN114M	9.35E-12
SN113	1.23E-13
IN113M	1.60E-11
SN117M	6.14E-13
SN119M	6.42E-19
SN121M	0.00E+00
SN121	0.00E+00
SN123	1.08E-12
I 125	5.10E-23
SN125	5.06E-11
SB125	4.23E-11
TE125M	1.96E-15
SN126	3.53E-14
SB126M	1.56E-10
SB126	2.71E-10
SB122	4.97E-11
SB124	3.09E-10
SB127	6.43E-11

TE127M	7.22E-15
TE127	5.10E-13
TE123M	5.83E-13
TE129M	2.84E-12
TE129	5.62E-12
I 129	5.72E-19
TE131M	1.87E-10
TE131	4.14E-11
I 131	2.65E-11
XE131M	1.36E-14
TE132	5.58E-12
I 132	2.82E-10
TE133M	3.38E-10
TE133	1.24E-10
I 133	5.93E-11
XE133M	6.50E-13
XE133	2.84E-14
TE134	7.85E-11
I 134	3.41E-10
CS134M	8.95E-14
CS134	1.77E-10
I 130	2.07E-10
I 135	2.70E-10
XE135M	3.87E-11
XE135	7.86E-12
CS135	4.52E-18
XE137	2.64E-11
CS137	5.33E-11
XE138	2.30E-10
CS138	4.65E-10
CS139	6.25E-11
BA139	1.43E-12
BA140	1.59E-11
LA140	3.64E-10
CS136	2.70E-10
BA141	9.76E-11
LA141	8.96E-12
CE141	3.36E-13
BA142	1.20E-10
LA142	6.63E-10
CE143	1.36E-11
PR143	1.45E-14
CE144	7.61E-14
PR144M	1.70E-19
PR144	6.99E-12
PR142	1.02E-11
ND147	8.51E-12
PM147	2.83E-17
SM147	0.00E+00
PM148M	2.24E-10

EXHIBIT A.15. (contd)

PM148	9.44E-11
PM149	5.01E-13
PM151	2.31E-11
SM151	1.25E-22
SM153	3.35E-13
EU152M	4.07E-11
EU152	1.63E-10
EU154	1.63E-10
EU155	1.67E-13
EU156	2.55E-10
GD153	2.10E-13
GD159	2.19E-12
TB160	1.41E-10
TB161	2.85E-15
DY165	1.56E-12
HO166M	1.45E-10
HO166	3.73E-12
ER169	1.15E-16
ER171	2.08E-11
TA182	1.90E-10
W 181	1.51E-15
W 185	4.86E-16
W 187	4.30E-11
RE187	0.00E+00
OS185	6.43E-11
OS191	1.83E-13
IR192	6.68E-11
HG203	4.89E-12
TH230	4.90E-16
RA226	2.50E-14
RN222	2.83E-10
PB210	1.31E-20
BI210	3.15E-14
PO210	9.75E-16
U 232	5.06E-16
TH232	2.92E-16
RA228	9.00E-31
AC228	1.40E-10
TH228	1.77E-14
RA224	3.05E-13
PB212	3.68E-12
BI212	3.39E-10
U 234	2.78E-16
U 236	3.56E-18
U 235	8.96E-13
TH231	1.82E-14
PA231	1.68E-12
AC227	6.81E-16
TH227	3.42E-12
FR223	1.40E-12

EXHIBIT A.16. (contd)

RA223	1.66E-11
U 237	2.09E-12
NP237	5.14E-14
PA233	1.37E-11
U 233	1.26E-15
TH229	4.33E-13
RA225	8.50E-17
AC225	2.27E-11
U 238	3.11E-18
TH234	2.05E-12
PA234	2.46E-10
PU236	2.64E-18
PU237	2.33E-13
AM242M	1.14E-15
AM242	6.85E-14
CM242	7.11E-20
PU242	8.15E-20
NP238	8.65E-11
PU238	8.71E-20
CM244	5.23E-20
PU244	9.13E-23
U 240	4.10E-11
PU240	9.66E-20
CM245	3.35E-13
PU241	0.00E+00
AM241	7.18E-17
CM246	8.91E-23
CM247	3.52E-11
CM243	2.07E-12
PU243	1.92E-13
AM243	1.82E-14
NP239	3.17E-12
PU239	3.30E-16
CM248	4.83E-20
CF252	8.61E-19

EXHIBIT A.16. GENII Input File - Sample Problem 7

```
GENII Sample Problem 7:  DITTY Long-Term Surface Water Release
    3
H 3
C 14
CL36
 &INPUT IWAT=1, IPATH=2, LUW=2, IPOPL=2,
  CFLO=120000.,
  RM=1.0,
  PL1(1)=294830.,391538.,431210.,469891.,1273208.,4932964.,
  TL(1)=1990., 2100.,2200.,2300.,2990.,11900.,
  NTL=6,
  USAGE(1)=0.3,0.,0.,0.,438.,17.,17.,
  CONSUM(1)=15.,276.,20.,230.,40.,30.,8.5,
  EXTIM=2920.,MOPYR=6, RIRR=150.,
  GRWP(1)=90.,90.,90.,30.,3*90.,
  YELD(1)=1.5,4.,0.84,1.3,3*0.84,
 &END
```

EXHIBIT A.17. GENII Input File WATREL.DAT - Sample Problem 7

```
DITTY Sample Surface Water Release Input
3
C 14          50
6.1872E+027.2649E-03
6.6604E+024.7932E-02
7.1708E+021.5038E-01
7.7210E+022.5798E-01
8.3143E+023.1270E-01
8.9541E+023.3794E-01
9.6439E+023.4616E-01
1.0388E+033.4491E-01
1.1190E+033.4169E-01
1.2054E+033.3814E-01
1.2987E+033.3434E-01
1.3992E+033.3030E-01
1.5077E+033.2600E-01
1.6245E+033.2142E-01
1.7506E+033.1656E-01
1.8865E+033.1140E-01
2.0331E+033.0592E-01
2.1911E+033.0013E-01
2.3615E+032.9401E-01
2.5452E+032.8755E-01
2.7433E+032.8074E-01
2.9569E+032.7358E-01
3.1872E+032.6606E-01
3.4355E+032.5819E-01
3.7033E+032.4996E-01
3.9921E+032.4138E-01
4.3034E+032.3246E-01
4.6391E+032.2320E-01
5.0011E+032.1364E-01
5.3914E+032.0379E-01
5.8122E+031.9367E-01
6.2660E+031.8333E-01
6.7553E+031.7279E-01
7.2829E+031.6211E-01
7.8518E+031.5133E-01
8.4652E+031.4051E-01
9.1266E+031.2970E-01
9.8398E+031.1898E-01
1.0609E+041.0841E-01
1.1438E+049.8066E-02
1.2332E+048.8013E-02
1.3296E+047.8325E-02
1.4336E+046.9070E-02
1.5456E+046.0312E-02
1.6665E+045.2109E-02
1.7968E+044.4509E-02
1.9373E+043.7552E-02
```

```
2.0888E+043.1263E-02
2.2522E+042.5657E-02
2.4284E+043.5549E-14
H 3          26
6.1872E+024.7039E-17
6.4163E+024.0034E-17
6.6541E+022.6880E-17
6.9010E+021.4335E-17
7.1572E+026.1280E-18
7.4231E+022.1265E-18
7.6991E+026.0920E-19
7.9855E+021.4723E-19
8.2828E+023.0781E-20
8.5913E+025.7119E-21
8.9116E+029.6142E-22
9.2440E+021.4889E-22
9.5889E+022.1358E-23
9.9470E+022.8412E-24
1.0319E+033.4999E-25
1.0704E+033.9820E-26
1.1105E+034.1724E-27
1.1520E+034.0137E-28
1.1951E+033.5332E-29
1.2399E+032.8366E-30
1.2863E+032.0698E-31
1.3346E+031.3676E-32
1.3846E+038.1527E-34
1.4365E+034.3675E-35
1.4904E+032.0941E-36
1.5464E+038.9489E-38
CL36         51
6.1872E+022.0473E-04
6.4163E+026.3379E-04
6.6541E+021.6255E-03
6.9010E+023.4837E-03
7.1572E+026.3087E-03
7.4231E+029.7953E-03
7.6991E+021.3290E-02
7.9855E+021.6134E-02
8.2828E+021.8013E-02
8.5913E+021.9020E-02
8.9116E+021.9457E-02
9.2440E+021.9610E-02
9.5889E+021.9652E-02
9.9470E+021.9661E-02
1.0319E+031.9661E-02
1.0704E+031.9659E-02
1.1105E+031.9658E-02
1.1520E+031.9656E-02
1.1951E+031.9654E-02
```

1.2399E+031.9652E-02
1.2863E+031.9650E-02
1.3346E+031.9647E-02
1.3846E+031.9645E-02
1.4365E+031.9643E-02
1.4904E+031.9640E-02
1.5464E+031.9638E-02
1.6044E+031.9635E-02
1.6647E+031.9632E-02
1.7273E+031.9630E-02
1.7922E+031.9627E-02
1.8596E+031.9624E-02
1.9295E+031.9620E-02
2.0021E+031.9617E-02
2.0774E+031.9614E-02
2.1556E+031.9610E-02
2.2368E+031.9606E-02
2.3210E+031.9603E-02
2.4084E+031.9599E-02
2.4991E+031.9595E-02
2.5933E+031.9590E-02
2.6910E+031.9586E-02
2.7925E+031.9581E-02
2.8978E+031.9577E-02
3.0070E+031.9572E-02
3.1204E+031.9566E-02
3.2382E+031.9561E-02
3.3603E+031.9334E-02
3.4871E+039.1797E-03
3.6187E+033.2974E-04
3.7553E+037.5749E-07
3.8971E+031.8652E-10

EXHIBIT A.18. GENII Output File - Sample Problem 7

```
--------------------------------------------------------------------------------
                        DITTY Dose Calculation Program
                        (GENII Version 1.339 22-Aug-88)

Integrated population dose calculated for chronic liquid release
Release from time 2000. A.D. onward for 10,000 years
Case title:   GENII Sample Problem 7:  DITTY Long-Term Surface Water Release
Executed on:  08/25/88   at 14:43:15.0                                Page   1
--------------------------------------------------------------------------------

---- DATA LIBRARIES USED ----------------------------------------(File)-----

Master Radionuclide Data:                                                (2)
  RMDLIB - Radionuclide Master Library  (4-Dec-87 RAP)
Food Concentration Ratios:                                               (8)
  Food Transfer Factor Library - PNL xxxx (BAN  19-Aug-88) (UPDATED LEACHING FA
Fresh Water Bioaccumulation Factors:                                     (9)
  Bioaccumulation Factor Library - PNL xxxx (5-Aug-88)
External Exposure D.F.'s:                                               (10)
  External Dose Factors for GENII in person-Sv/yr per Bq/n (23-Mar-88 RAP)
Inhalation/Ingestion D.F.'s:                                            (30)
  DITTY Internal Dose Factors - 19-Aug-88 (RAP)
Waterborne Release Data:                                                (31)
  DITTY Sample Surface Water Release Input

---- MASTER RADIONUCLIDE CONTROL LIST ----------------------------------------
 H 3       C 14      CL36

---- TERRESTRIAL/AQUATIC PATHWAY DATA FOR AN AVERAGE INDIVIDUAL -------------
```

Pathway	Growing Period (days)	Yield (kg/m2)	Consumption (kg/yr)	Pathway	Usage (kg or hr/yr)
LEAFY VEG	9.0E+01	1.5E+00	1.5E+01	FISH	3.0E-01
OTHER VEG	9.0E+01	4.0E+00	2.8E+02	CRUSTACEA	0.0E+00
EGGS	9.0E+01	8.4E-01	2.0E+01	MOLLUSKS	0.0E+00
MILK	3.0E+01	1.3E+00	2.3E+02	PLANTS	0.0E+00
BEEF	9.0E+01	8.4E-01	4.0E+01	DRINKING WATER	4.4E+02
PORK	9.0E+01	8.4E-01	3.0E+01	SEDIMENT EXPOSU	1.7E+01
POULTRY	9.0E+01	8.4E-01	8.5E+00	SWIMMING TIME	1.7E+01

```
External Exposure Time:   2.92E+03 hr/yr

---- LIQUID RELEASE PARAMETERS ------------------------------------------------

River Flow Rate, (ft3/sec) :  1.2E+05      Months/Year Irrigated :  6.0E+00
Reconcentration Ratio      :  1.0E+00      Irrigation Rate
Mixing Ratio               :  1.0E+00       (liters/m2/month)    :  1.5E+02
```

EXHIBIT A.18. (contd)

Input Prepared By: _____ Date: _____

Input Checked By: _____ Date: _____

DITTY Dose Calculation Program
(GENII Version 1.339 22-Aug-88)

Integrated population dose calculated for chronic liquid release
Release from time 2000. A.D. onward for 10,000 years
Case title: GENII Sample Problem 7: DITTY Long-Term Surface Water Release
Executed on: 08/25/88 at 14:43:15.0 Page 2

---- WATER RELEASE OF EACH RADIONCLIDE PER 70-YR PERIOD (Ci) ----

Radio-nuclide	Period/	Activity	Period/	Activity	Period/	Activity	Period/	Activity	Period/	Activity
H 3	9	5.1E-16	10	1.9E-15	11	2.8E-16	12	1.4E-17	13	3.8E-19
	14	7.9E-21	15	1.6E-22	16	3.4E-24	17	6.8E-26	18	1.2E-27
	19	2.1E-29								
C 14	9	1.4E-01	10	4.0E+00	11	1.3E+01	12	2.0E+01	13	2.3E+01
	14	2.4E+01	15	2.4E+01	16	2.4E+01	17	2.4E+01	18	2.4E+01
	19	2.3E+01	20	2.3E+01	21	2.3E+01	22	2.3E+01	23	2.3E+01
	24	2.2E+01	25	2.2E+01	26	2.2E+01	27	2.2E+01	28	2.2E+01
	29	2.2E+01	30	2.1E+01	31	2.1E+01	32	2.1E+01	33	2.1E+01
	34	2.1E+01	35	2.0E+01	36	2.0E+01	37	2.0E+01	38	2.0E+01
	39	2.0E+01	40	2.0E+01	41	1.9E+01	42	1.9E+01	43	1.9E+01
	44	1.9E+01	45	1.9E+01	46	1.9E+01	47	1.8E+01	48	1.8E+01
	49	1.8E+01	50	1.8E+01	51	1.8E+01	52	1.8E+01	53	1.8E+01
	54	1.7E+01	55	1.7E+01	56	1.7E+01	57	1.7E+01	58	1.7E+01
	59	1.7E+01	60	1.7E+01	61	1.6E+01	62	1.6E+01	63	1.6E+01
	64	1.6E+01	65	1.6E+01	66	1.6E+01	67	1.6E+01	68	1.5E+01
	69	1.5E+01	70	1.5E+01	71	1.5E+01	72	1.5E+01	73	1.5E+01
	74	1.5E+01	75	1.5E+01	76	1.4E+01	77	1.4E+01	78	1.4E+01
	79	1.4E+01	80	1.4E+01	81	1.4E+01	82	1.4E+01	83	1.4E+01
	84	1.4E+01	85	1.3E+01	86	1.3E+01	87	1.3E+01	88	1.3E+01
	89	1.3E+01	90	1.3E+01	91	1.3E+01	92	1.3E+01	93	1.3E+01
	94	1.2E+01	95	1.2E+01	96	1.2E+01	97	1.2E+01	98	1.2E+01
	99	1.2E+01	100	1.2E+01	101	1.2E+01	102	1.2E+01	103	1.2E+01
	104	1.1E+01	105	1.1E+01	106	1.1E+01	107	1.1E+01	108	1.1E+01
	109	1.1E+01	110	1.1E+01	111	1.1E+01	112	1.1E+01	113	1.1E+01
	114	1.0E+01	115	1.0E+01	116	1.0E+01	117	1.0E+01	118	1.0E+01
	119	1.0E+01	120	1.0E+01	121	9.9E+00	122	9.8E+00	123	9.7E+00
	124	9.6E+00	125	9.5E+00	126	9.5E+00	127	9.4E+00	128	9.3E+00
	129	9.2E+00	130	9.1E+00	131	9.1E+00	132	9.0E+00	133	8.9E+00
	134	8.8E+00	135	8.8E+00	136	8.7E+00	137	8.6E+00	138	8.6E+00

EXHIBIT A.18. (contd)

	139	8.5E+00	140	8.4E+00	141	8.3E+00	142	8.3E+00	143	8.2E+00
CL36	9	3.5E-03	10	1.4E-01	11	6.2E-01	12	1.1E+00	13	1.3E+00
	14	1.4E+00	15	1.4E+00	16	1.4E+00	17	1.4E+00	18	1.4E+00
	19	1.4E+00	20	1.4E+00	21	1.4E+00	22	1.4E+00	23	1.4E+00
	24	1.4E+00	25	1.4E+00	26	1.4E+00	27	1.4E+00	28	1.4E+00
	29	1.4E+00	30	1.4E+00	31	1.4E+00	32	1.4E+00	33	1.4E+00
	34	1.4E+00	35	1.4E+00	36	1.4E+00	37	1.4E+00	38	1.4E+00
	39	1.4E+00	40	1.4E+00	41	1.4E+00	42	1.4E+00	43	1.4E+00
	44	1.4E+00	45	1.4E+00	46	1.4E+00	47	1.4E+00	48	1.4E+00
	49	1.2E+00	50	7.7E-01	51	4.2E-01	52	1.0E-01	53	1.4E-02
	54	2.5E-03	55	3.1E-05	56	5.9E-06				

DITTY Dose Calculation Program
(GENII Version 1.339 22-Aug-88)

Integrated population dose calculated for chronic liquid release
Release from time 2000. A.D. onward for 10,000 years
Case title: GENII Sample Problem 7: DITTY Long-Term Surface Water Release
Executed on: 08/25/88 at 14:43:15.0 Page 3

---- POPULATION DATA ----

Population for Chronic Waterborne Release at the following Times A.D.:

Time	Population
1990.	2.9E+05
2100.	3.9E+05
2200.	4.3E+05
2300.	4.7E+05
2990.	1.3E+06
11900.	4.9E+06

DITTY Dose Calculation Program
(GENII Version 1.339 22-Aug-88)

Integrated population dose calculated for chronic liquid release
Release from time 2000. A.D. onward for 10,000 years
Case title: GENII Sample Problem 7: DITTY Long-Term Surface Water Release
Executed on: 08/25/88 at 14:43:15.0 Page 4

Population for Waterborne Release:

Period/PL	Period/PL	Period/PL	Period/PL	Period/PL	Period/PL
0 0.0E+00	1 3.3E+05	2 3.9E+05	3 4.2E+05	4 4.5E+05	5 4.9E+05
6 5.7E+05	7 6.5E+05	8 7.3E+05	9 8.1E+05	10 8.9E+05	11 9.8E+05
12 1.1E+06	13 1.1E+06	14 1.2E+06	15 1.3E+06	16 1.3E+06	17 1.3E+06
18 1.4E+06	19 1.4E+06	20 1.4E+06	21 1.5E+06	22 1.5E+06	23 1.5E+06
24 1.5E+06	25 1.6E+06	26 1.6E+06	27 1.6E+06	28 1.7E+06	29 1.7E+06
30 1.7E+06	31 1.7E+06	32 1.8E+06	33 1.8E+06	34 1.8E+06	35 1.9E+06
36 1.9E+06	37 1.9E+06	38 1.9E+06	39 2.0E+06	40 2.0E+06	41 2.0E+06
42 2.1E+06	43 2.1E+06	44 2.1E+06	45 2.1E+06	46 2.2E+06	47 2.2E+06
48 2.2E+06	49 2.3E+06	50 2.3E+06	51 2.3E+06	52 2.3E+06	53 2.4E+06
54 2.4E+06	55 2.4E+06	56 2.5E+06	57 2.5E+06	58 2.5E+06	59 2.5E+06
60 2.6E+06	61 2.6E+06	62 2.6E+06	63 2.7E+06	64 2.7E+06	65 2.7E+06
66 2.7E+06	67 2.8E+06	68 2.8E+06	69 2.8E+06	70 2.9E+06	71 2.9E+06
72 2.9E+06	73 3.0E+06	74 3.0E+06	75 3.0E+06	76 3.0E+06	77 3.1E+06
78 3.1E+06	79 3.1E+06	80 3.2E+06	81 3.2E+06	82 3.2E+06	83 3.2E+06
84 3.3E+06	85 3.3E+06	86 3.3E+06	87 3.4E+06	88 3.4E+06	89 3.4E+06
90 3.4E+06	91 3.5E+06	92 3.5E+06	93 3.5E+06	94 3.6E+06	95 3.6E+06
96 3.6E+06	97 3.6E+06	98 3.7E+06	99 3.7E+06	100 3.7E+06	101 3.8E+06
102 3.8E+06	103 3.8E+06	104 3.8E+06	105 3.9E+06	106 3.9E+06	107 3.9E+06
108 4.0E+06	109 4.0E+06	110 4.0E+06	111 4.0E+06	112 4.1E+06	113 4.1E+06
114 4.1E+06	115 4.2E+06	116 4.2E+06	117 4.2E+06	118 4.2E+06	119 4.3E+06
120 4.3E+06	121 4.3E+06	122 4.4E+06	123 4.4E+06	124 4.4E+06	125 4.4E+06
126 4.5E+06	127 4.5E+06	128 4.5E+06	129 4.6E+06	130 4.6E+06	131 4.6E+06
132 4.6E+06	133 4.7E+06	134 4.7E+06	135 4.7E+06	136 4.8E+06	137 4.8E+06
138 4.8E+06	139 4.8E+06	140 4.9E+06	141 4.9E+06	142 4.9E+06	143 4.9E+06

EXHIBIT A.18. (contd)

DITTY Dose Calculation Program
(GENII Version 1.339 22-Aug-88)

Integrated population dose calculated for chronic liquid release
Release from time 2000. A.D. onward for 10,000 years
Case title: GENII Sample Problem 7: DITTY Long-Term Surface Water Release
Executed on: 08/25/88 at 14:43:15.0 Page 5

Lifetime Effective Cumulative Dose Equivalent as a Function of Time

Period	Year	Dose
until	until	
10	2630.	2.29E-02
11	2700.	7.89E-01
12	2770.	3.73E+00
13	2840.	8.89E+00
14	2910.	1.53E+01
15	2980.	2.24E+01
16	3050.	2.99E+01
17	3120.	3.76E+01
18	3190.	4.54E+01
19	3260.	5.32E+01
20	3330.	6.12E+01
21	3400.	6.94E+01
22	3470.	7.76E+01
< shortened for presentation >		
138	11590.	1.02E+03
139	11660.	1.03E+03
140	11730.	1.04E+03
141	11800.	1.05E+03
142	11870.	1.05E+03
143	11940.	1.06E+03
144	12010.	1.07E+03

Dose in units of person-rem;
that is the cumulative population dose received by the local population over 10,000 years with an assumed 70-yr individual lifetime.

DITTY Dose Calculation Program
(GENII Version 1.339 22-Aug-88)

Integrated population dose calculated for chronic liquid release
Release from time 2000. A.D. onward for 10,000 years
Case title: GENII Sample Problem 7: DITTY Long-Term Surface Water Release
Executed on: 08/25/88 at 14:43:15.0 Page 9

Cumulative Population Dose Equivalent by Radionuclide

Radio-nuclide	Effective Dose Equivalent	External Dose	Annual Effective Dose Equivalent	Percent Of Total Dose
H 3	1.3E-18	9.9E-29	1.3E-18	0
C 14	9.6E+02	4.7E-02	9.6E+02	90
CL 36	1.1E+02	3.2E-04	1.1E+02	9

Dose in units of person-rem;
that is the cumulative population dose received by the local population with an assumed 70-yr individual lifetime.

DITTY Dose Calculation Program
(GENII Version 1.339 22-Aug-88)

Integrated population dose calculated for chronic liquid release
Release from time 2000. A.D. onward for 10,000 years
Case title: GENII Sample Problem 7: DITTY Long-Term Surface Water Release
Executed on: 08/25/88 at 14:43:15.0 Page 10

Maximum Dose Increment Received By Population
In Year 5430 (70-yr Time Period Number No: 49)

Organ	Cumulative Dose Equivalent	Weighting Factors	Weighted Cumulative Dose Equivalent
Gonads	1.2E+01	2.5E-01	2.9E+00
Breast	1.2E+01	1.5E-01	1.8E+00
R Marrow	1.2E+01	1.2E-01	1.4E+00
Lung	1.2E+01	1.2E-01	1.4E+00
Thyroid	1.2E+01	3.0E-02	3.5E-01
Bone Sur	6.0E+00	3.0E-02	1.8E-01
S Int.	1.2E+01	6.0E-02	7.5E-01
UL Int.	1.2E+01	6.0E-02	7.5E-01
LL Int.	1.2E+01	6.0E-02	7.5E-01
Stomach	8.1E+00	6.0E-02	4.9E-01
Cumulative Effective Dose Equivalent			1.1E+01
External Dose			3.6E-04
Lifetime Effective Cumulative Dose Equivalent			1.1E+01

Dose in units of person-rem;
that is the cumulative population dose received by the local population with an assumed 70-yr individual lifetime.

DITTY Dose Calculation Program
(GENII Version 1.339 22-Aug-88)

Integrated population dose calculated for chronic liquid release
Release from time 2000. A.D. onward for 10,000 years
Case title: GENII Sample Problem 7: DITTY Long-Term Surface Water Release
Executed on: 08/25/88 at 14:43:15.0 Page 11

Maximum Dose Increment Received By Individual (rem)
In Year 5430 (70-yr Time Period Number No: 49)

Radio-nuclide	Effective Dose Equivalent	External Dose	Annual Effective Dose Equivalent	Percent Of Total Dose
H 3	0.0E+00	0.0E+00	0.0E+00	0
C 14	3.2E-06	1.6E-10	3.2E-06	67
CL 36	1.6E-06	4.7E-12	1.6E-06	32

EXHIBIT A.18. (contd)

DITTY Dose Calculation Program
(GENII Version 1.339 22-Aug-88)

Integrated population dose calculated for chronic liquid release
Release from time 2000. A.D. onward for 10,000 years
Case title: GENII Sample Problem 7: DITTY Long-Term Surface Water Release
Executed on: 08/25/88 at 14:43:15.0 Page 12

Population Internal Dose To Organ by Radionuclide
In Year 5430 (70-yr Time Period Number No: 49)

Radionuclide	Lung	Stomach	S Int.	UL Int.	LL Int.	Bone Su	R Marro	Testes
H 3	0.0E+00	0.0E+00	0.0E+00	0.0E+00	0.0E+00	0.0E+00	0.0E+00	0.0E+00
C 14	7.9E+00	4.5E+00	8.5E+00	8.5E+00	8.5E+00	4.1E+00	7.9E+00	7.9E+00
CL 36	3.7E+00	3.6E+00	4.0E+00	4.0E+00	4.0E+00	1.9E+00	3.7E+00	3.7E+00
Total internal	1.2E+01	8.1E+00	1.2E+01	1.2E+01	1.2E+01	6.0E+00	1.2E+01	1.2E+01

Radionuclide	Ovaries	Muscle	Thyroid	Kidneys	Liver	Spleen	S Wall
H 3	0.0E+00	0.0E+00	0.0E+00	0.0E+00	0.0E+00	0.0E+00	0.0E+00
C 14	7.9E+00	8.1E+00	7.9E+00	0.0E+00	0.0E+00	0.0E+00	0.0E+00
CL 36	3.7E+00	3.7E+00	3.9E+00	0.0E+00	0.0E+00	0.0E+00	0.0E+00
Total internal	1.2E+01	1.2E+01	1.2E+01	0.0E+00	0.0E+00	0.0E+00	0.0E+00

Population Air Submersion and External Incremental Dose by Radionuclide
In Year 5430 (70-yr Time Period Number No: 49)

Radionuclide	Air Submer-sion	Exter-nal
H 3	0.0E+00	0.0E+00
C 14	4.4E-10	3.5E-04
CL 36	5.9E-12	1.0E-05
Total external	4.5E-10	3.6E-04

Dose in units of person-rem;
that is the cumulative population dose received by the local population with an assumed 70-yr individual lifetime.

DITTY Dose Calculation Program
(GENII Version 1.339 22-Aug-88)

Integrated population dose calculated for chronic liquid release
Release from time 2000. A.D. onward for 10,000 years
Case title: GENII Sample Problem 7: DITTY Long-Term Surface Water Release
Executed on: 08/25/88 at 14:43:15.0 Page 13

Population Internal Dose To Organ by Exposure Pathway

In Year 5430 (70-yr Time Period Number No: 49)

Pathway	Lung	Stomach	S Int.	UL Int.	LL Int.	Bone Su	R Marro	Testes
Inhalation	1.5E-04	8.7E-05	1.6E-04	1.6E-04	1.6E-04	7.9E-05	1.5E-04	1.5E-04
Ingestion (Terr)	6.4E+00	5.1E+00	6.8E+00	6.8E+00	6.8E+00	3.3E+00	6.3E+00	6.4E+00
Ingestion (Aqua)	4.8E+00	2.8E+00	5.2E+00	5.2E+00	5.2E+00	2.5E+00	4.8E+00	4.8E+00
Drinking Water	3.9E-01	2.4E-01	4.2E-01	4.2E-01	4.2E-01	2.0E-01	3.9E-01	3.9E-01
Total internal	1.2E+01	8.1E+00	1.2E+01	1.2E+01	1.2E+01	6.0E+00	1.2E+01	1.2E+01

Pathway	Ovaries	Muscle	Thyroid	Kidneys	Liver	Spleen	S Wall
Inhalation	1.5E-04	1.5E-04	1.5E-04	0.0E+00	0.0E+00	0.0E+00	0.0E+00
Ingestion (Terr)	6.4E+00	6.4E+00	6.5E+00	0.0E+00	0.0E+00	0.0E+00	0.0E+00
Ingestion (Aqua)	4.8E+00	5.0E+00	4.8E+00	0.0E+00	0.0E+00	0.0E+00	0.0E+00
Drinking Water	3.9E-01	4.0E-01	3.9E-01	0.0E+00	0.0E+00	0.0E+00	0.0E+00
Total internal	1.2E+01	1.2E+01	1.2E+01	0.0E+00	0.0E+00	0.0E+00	0.0E+00

Dose in units of person-rem;
that is the cumulative population dose received by the local population with an assumed 70-yr individual lifetime.

As can be seen in Exhibit A.16, the river flow averages 120,000 cfs, and the release is assumed to be uniformly mixed in the river by the time it reaches the majority of the users of the water. The exposed population grows from 295,000 people in the year 1990 to about 4.9 million in ten thousand years. The population is assumed to drink the river water and to eat a small amount of fish from the river. Crops are irrigated with the river water for 6 months/year at a rate of 150 liters/m^2/month. The consumption parameters used mirror those defaults for an average individual provided in APPRENTICE.

The output for this sample problem is presented as Exhibit A.18. The pages are numbered in the upper right-hand corner. For this example, much of the interpretive graphic output has been turned off, to shorten the output. The first page is a quality assurance page, repeating and summarizing the input. The second page is a summary of the WATREL.DAT input file, with the releases integrated over the 70-year time increments used in DITTY. Page three repeats the population input data (this can be a larger output if the atmospheric dispersion options are turned on). The fourth page provides the population interpolated linearly into each of the 143 70-year time intervals. Pages 5 through 8 provide the cumulative lifetime population doses as a function of time for each time interval, in person-rem. The output has been shortened for presentation in this document. Page 9 presents the total cumulative population dose equivalent contributed by each radionuclide, in person-rem. The maximum incremental population dose, that is, the population dose received during the single 70-year time interval at which the population dose rate was the greatest, is given on page 10. The maximum dose increment received by an average individual in this population, during the period of maximum population dose accrual, by radionuclide, is given on page 11. The total population organ doses during the maximum dose rate period are given by radionuclide on page 12. Finally, the total population internal dose by organ by pathway during the maximum dose rate period is presented on page 13.

A.8 SAMPLE PROBLEM CALCULATION BATCH FILE

The sample problems are provided as a part of the GENII system distribution package, on a separate disk. Upon the establishment of the GENII system on a new computer, it is wise to run the sample problems and

compare the calculated output with the samples provided in this document to ensure that the system is functioning correctly. This may be done in a single step using a batch file. The batch file used to prepare the sample problems in this appendix is provided on the sample problem disk. On the disk it is called simply SAMPLE.BAT. It is shown here as Exhibit A.19. This batch file was established for the GENII system resident on hard disk labeled C:, in a \GENII\ subdirectory, with the sample input on a floppy disk in drive A:. The batch file may be modified as needed for other situations.

A few comments may be made about this batch file. The "rem" notation is the DOS notation for a comment line. No commands are executed for the lines beginning with "rem". The "erase" command is standard APPRENTICE technique for assuring that correct data is used in all calculations. It clears the input file buffers of previously used information. Thus, if the user forgets to assign a file, the run will terminate rather than continue with the wrong input file. If no files are active with those names, a "FILE NOT FOUND" message will be displayed on the control monitor. This is an informative message, and should not be interpreted to mean that something is wrong. The "if errorlevel" commands are statements that prevent the code from performing unnecessary calculations should any one module of the system fail for any reason. Should you run the batch file and get results for the samples at the beginning and the end of the file, but not for one in the middle, it is because a single module has failed for some reason, and the batch file has circumvented the error and continued with the next set.

EXHIBIT A.19. GENII Execution Control File - All Sample Problems

```
CLS
rem                GENII Sample Problem Execution Control File
rem                5-Aug-88 RAP
rem
rem
rem                GENII
rem                Hanford Environmental Dosimetry Software System
rem
rem                Pacific Northwest Laboratory
rem                Richland WA
rem
rem                Contact:  Bruce Napier (509) 375-3896
rem
 echo off
 erase  c:\genii\genii.in
 erase  c:\genii\pop.in
 erase  c:\genii\jointfre.in
 erase  c:\genii\chiq.in
 erase  c:\genii\foodprod.in
 erase  c:\genii\env.in
 erase  c:\genii\genii.out
 erase  c:\genii\env.out
 erase  c:\genii\genii2.out
 erase  c:\genii\dose.out
echo on
 copy a:jf20089.ave  c:\genii\jointfre.in
 copy a:pop200.87 c:\genii\pop.in
 copy a:sample1.in c:\genii\genii.in
 c:\genii\envin
 if errorlevel 1 goto stop1
 c:\genii\env
 if errorlevel 1 goto stop1
 c:\genii\dose
 if errorlevel 1 goto stop1
rem
 copy c:\genii\genii.out+ c:\genii\genii2.out+ c:\genii\dose.out a:sample1.out
rem
:stop1
rem
 echo off
 erase  c:\genii\genii.in
 erase  c:\genii\pop.in
 erase  c:\genii\jointfre.in
 erase  c:\genii\chiq.in
 erase  c:\genii\foodprod.in
 erase  c:\genii\env.in
 erase  c:\genii\genii.out
 erase  c:\genii\env.out
 erase  c:\genii\genii2.out
 erase  c:\genii\dose.out
```

```
 echo on
  copy a:sample2.in c:\genii\genii.in
  c:\genii\envin
  if errorlevel 1 goto stop2
  c:\genii\env
  if errorlevel 1 goto stop2
  c:\genii\dose
  if errorlevel 1 goto stop2
 rem
  copy c:\genii\genii.out+ c:\genii\genii2.out+ c:\genii\dose.out a:sample2.out
 rem
 :stop2
 rem
  echo off
  erase  c:\genii\genii.in
  erase  c:\genii\pop.in
  erase  c:\genii\jointfre.in
  erase  c:\genii\chiq.in
  erase  c:\genii\foodprod.in
  erase  c:\genii\env.in
  erase  c:\genii\genii.out
  erase  c:\genii\env.out
  erase  c:\genii\genii2.out
  erase  c:\genii\dose.out
echo on
 copy a:sample3.in c:\genii\genii.in
 c:\genii\envin
 if errorlevel 1 goto stop3
 c:\genii\env
 if errorlevel 1 goto stop3
 c:\genii\dose
 if errorlevel 1 goto stop3
rem
 copy c:\genii\genii.out+ c:\genii\genii2.out+ c:\genii\dose.out a:sample3.out
rem
:stop3
rem
 echo off
 erase  c:\genii\genii.in
 erase  c:\genii\pop.in
 erase  c:\genii\jointfre.in
 erase  c:\genii\chiq.in
 erase  c:\genii\foodprod.in
 erase  c:\genii\env.in
 erase  c:\genii\genii.out
 erase  c:\genii\env.out
 erase  c:\genii\genii2.out
 erase  c:\genii\dose.out
echo on
 copy a:sample4.in c:\genii\genii.in
```

EXHIBIT A.19. (contd)

```
 c:\genii\envin
 if errorlevel 1 goto stop4
 c:\genii\env
 if errorlevel 1 goto stop4
 c:\genii\dose
 if errorlevel 1 goto stop4
rem
 copy c:\genii\genii.out+ c:\genii\genii2.out+ c:\genii\dose.out a:sample4.out
rem
:stop4
rem
copy a:sample5.in c:\genii\intdf.in
c:\genii\intdf
copy c:\genii\intdf.out a:sample5.out
rem
copy a:sample6.in c:\genii\extdf.in
c:\genii\extdf
copy c:\genii\extdf.out a:sample6.out
rem
copy a:sample7.in c:\genii\ditty.in
copy a:watrel.dat c:\genii\watrel.dat
c:\genii\ditty
copy c:\genii\ditty.out a:sample7.out
```

REFERENCES

International Commission on Radiological Protection (ICRP). 1979. "ICRP Publication 30, Limits for Intakes of Radionuclides by Workers." Supplement to Part 1, Annals of the ICRP, Vol. 3, No. 1-4, Pergamon Press, New York, New York.

Sommer, D. J., R. G. Rau, and D. C. Robinson. 1981. Population Estimates for the Areas Within a 50-Mile Radius of Four Reference Points on the Hanford Site. PNL-4010, Pacific Northwest Laboratory, Richland, Washington.

APPENDIX B

SELF-GENERATED DIAGNOSTICS

APPENDIX B

SELF-GENERATED DIAGNOSTICS

The GENII Software Package generates an alphabetical list of messages contained in Table B.1. The error type of each message is identified. There are five error types: 1) warnings, 2) scenarios errors, 3) program errors, 4) scenario/file errors, and 5) program/file errors. User response to these error types varies based on user interaction level.

Level 0 users of GENII may encounter warning messages. These should be considered informational; no action is necessary. Because Level 0 users interact with APPRENTICE, no scenario errors or scenario/file errors should be encountered. APPRENTICE should have ensured that all scenario errors and most scenario/file errors were avoided. However, in the continual process of upgrading APPRENTICE, errors may have been introduced. All scenario errors should be handled as program errors. Scenario/file errors indicate problems with the population, joint frequency, Chi/Q, or food production files. The authors should be notified of all program and file errors.

Level 1 users may encounter all five types of error messages. Warnings are informational only; no action is necessary. Scenario errors are frequently introduced when the user directly edits an input file. Scenario/file errors indicate a problem with the auxiliary input files. The authors should be notified of all program errors. If the user has not made any changes to the GENII data libraries, the authors should also be notified of any program/file errors.

B.1 SCENARIO ERRORS

Scenario errors reflect incompatibilities between option selections and input parameter values. Subroutine CHECK of program ENVIN attempts to identify scenario incompatibilities and stop execution of the program so that the user may make corrections before exposure and dose calculations are performed. When using the ENVIN/ENV/DOSE package, scenario errors are usually caused when edits are made to the input file. For example, an option flag is

turned on, but changes are not made to the corresponding input parameters. Some options require complex input logic and consequently are more difficult than others to change at Level 1 usage. Notably, air transport options, near/far-field classification, and individual/population classification are more difficult to modify without error. If scenario errors are not corrected after the initial attempts, it is suggested that the user regenerate the scenario using APPRENTICE. It is probable that 1) the input file may have been corrupted or 2) the user needs APPRENTICES's guidance in constructing the particular scenario.

B.2 PROGRAM ERRORS

The authors have provided an error/upgrade form to assist the user in error notification and the authors in software configuration control. Use the form shown in Exhibit B.1 to notify the authors of program errors. It is most helpful if the input file (nnnnnnnn.IN), execution file (nnnnnnnn.BAT), and any auxiliary input files (e.g., population, joint frequency) are included on floppy disk.

B.3 SCENARIO/FILE ERRORS

If population, joint frequency, Chi/Q, or food production files have been prepared, the user should check the formats of any population, joint frequency, Chi/Q, and food production files used against the descriptions in Sections 2.2.2-2.2.5. Level 1 users should refer to Sections 2.2.1-2.2.12 for assistance in determining the cause of scenario/file errors.

B.4 PROGRAM/FILE ERRORS

Program/file errors usually indicate that the user, in attempting to expand the application of GENII for research purposes, has made incorrect changes to data files used by GENII. Check file format and usage as presented in Section 2.3 to determine the source of the error.

TABLE B.1. Self-Generated Diagnostics

	Error Message	Error Type
	Cannot open file F77L.ERR, error # xxx	program
ACTIN:	Error - number of radionuclides: NNACT = xxxxxx	scenario
ACTIN:	Error - number of time periods. Radionuclide: xxxxxx, Times: yyyyyy	scenario
ACTIN:	Inventory for xxxxxx was outside 10,000-year time period.	warning
ACTIN:	NT for radionuclide xxxxxx is too large: yyyyyyy	scenario
ACTIN:	Radionuclide xxxxxx in release file not included in master list.	scenario
ACTIN:	Read error encountered. N: xxxxxx, T(N): yyyyyyy, C(N): zzzzzz	scenario/ file
ACUTE1:	XOQOPT invalid in AIRCAL: xxx	scenario
AIRLIN:	No internal dose factors for xxxxxx.	warning
BCHAIN:	Error in BCHAIN, positive argument xxxxxxxx.	program
CASE2:	NAMELIST read error encountered.	scenario
CHAIN:	Error in CHAIN, positive argument xxxxxxxx.	program
CHECK:	Air transport cannot be considered with basic concentrations.	scenario
CHECK:	Air transport option cannot be 2 or 3 for population.	scenario
CHECK:	Animal food storage times not input to acute scenario, defaults used.	warning
CHECK:	Average wind speed cannot be zero, sector xxx.	scenario
CHECK:	Basic concentration may not be input for path x when yyyyyyyy transport selected.	scenario
CHECK:	Cannot calculate population dose for near field scenario.	scenario
CHECK:	Cannot consider finite plume with input air concentration.	scenario

TABLE B.1. (contd)

Error Message		Error Type
CHECK:	Cannot consider irrigation or air deposition during a non-agricultural scenario.	scenario
CHECK:	Cannot drink or irrigate with salt water.	scenario
CHECK:	Chi/Q value must be entered when air transport option = 1.	scenario
CHECK:	Deep soil is considered. Waste depth cannot be zero.	scenario
CHECK:	Derived concentration may not be input for path x when transport or basic concentrations are input.	scenario
CHECK:	Drinking water exposure flag should be set.	scenario
CHECK:	Drinking water is from water system; however, no derived conc. has been entered.	scenario
CHECK:	Drinking water source flag incorrect.	scenario
CHECK:	Finite and infinite cloud exposures cannot be considered in one scenario.	scenario
CHECK:	Finite plume cannot be considered when chi/Q value entered.	scenario
CHECK:	Invalid air transport option for individual.	scenario
CHECK:	Invalid animal product no: xxx irrigation source index.	scenario
CHECK:	Invalid atmospheric production definition for ingestion population.	scenario
CHECK:	Invalid E/Q input option for acute release.	scenario
CHECK:	Invalid population definition option: xxx	scenario
CHECK:	Invalid residential irrigation source index.	scenario
CHECK:	Invalid terrestrial food no: xxx irrigation source index.	scenario
CHECK:	Loss of institutional control occurred before waste was stored. Invalid.	scenario

TABLE B.1. (contd)

Error Message	Error Type
CHECK: Maximum individual distance and direction must be entered when air transport option = 3. MI distance: xxxxxx MI direction index (where 1 is S -> N): yyyy	scenario
CHECK: Maximum number of distances that can be considered is 10. Input value for NDIST is xxx.	scenario
CHECK: Minimum distance cannot be less than yyy.	scenario
CHECK: No xxxxxxxx exposure paths have been selected: Please check input file.	scenario
CHECK: Not stack release, effluent temp. set to 0.0.	warning
CHECK: Not stack release, stack flow radius set to 0.0.	warning
CHECK: Not stack release, stack flow rate set to 0.0.	warning
CHECK: Not stack release, stack height set to 0.0.	warning
CHECK: Population grid must be used with air transport option = 0.	scenario
CHECK: Population grid must be used with air transport option = 2.	scenario
CHECK: Population-weighted chi/Q value must be entered when air transport option = 1.	scenario
CHECK: Production not specified for export.	scenario
CHECK: Stack radius cannot be zero.	scenario
CHECK: Surface water depth and flow rate cannot = 0.0	scenario
CHECK: Surface water flow rate cannot = 0.0.	scenario
CHECK: Surface water width, depth, or flow rate cannot = 0.0	scenario
CHECK: Waste degradation incompatible with far-field scenario.	scenario
CHECK: Waste thickness cannot be set to 0.0.	scenario
CHECK: When uniform production is assumed, consumption must be input.	scenario

TABLE B.1. (contd)

Error Message		Error Type
CHECK:	When uniform production is assumed, total production must be input.	scenario
CHECK:	xxxxxxxx exposure not selected: yyyyyyyy will not be considered. (warning only)	scenario
CHECK:	xxxxxxxx transport has been selected: No inventory entered, please check input file.	scenario
CHECK:	xxxxxxxx transport has not been selected: Inventory has been entered, please check input file.	scenario
CHECK:	Yield cannot be 0.0 for animal product no. x.	scenario
CHECK:	Yield cannot be 0.0 for food pathway x.	scenario
CHECK:	Zero hours of inhalation exposure will equal zero dose.	scenario
CHECK:	Zero inhalation rate will equal zero.	scenario
DUMRED	Error while reading past unused data set. LUN: xxx Line yyy of zzz	program/ file
DUMRED:	End of file reading past unused data set. LUN: xxx Line yyy of zzz	program/ file
EOVRQ:	NUBAR is out if range.	scenario
EOVRQ:	NMET is out of range.	scenario
EOVRQ:	NDIST is out of range.	scenario
EXTDF:	The following shield specs data rejected...	scenario
EXTDF:	IGEOM xxx is out of range.	scenario
FILERR:	Error code = 0 in FILERR	program
FILERR:	Logical unit number = 0 in FILERR	program
FILERR:	Error occurred while reading file \xxx\xxxxxxxx.xxx Assigned to LUN: yyy Message: zzzzzzzzzzzzzzzz	scenario/ file or program/ file

TABLE B.1. (contd)

Error Message	Error Type
FILERR: Error opening file named \xxx\xxxxxxxx.xxx Assigned to LUN: yyy Message: zzzzzzzzzzzzzzzz	scenario/ file or program/ file
FILERR: File out of order or other indexing problem \xxx\xxxxxxxx.xxx Assigned to LUN: yyy Message: zzzzzzzzzzzzzzzz	program/ file
FILERR: Premature end-of-file encountered in \xxx\xxxxxxxx.xxx Assigned to LUN: yyy Message: zzzzzzzzzzzzzzzz	scenario/ file or program/ file
IDNUC: There were xxxx unidentified radionuclides.	scenario
IDNUC: Unidentified radionuclide in input xxxxxx.	scenario
INTPOL: Error in direction in interpolation.	program
INTPOL: MI distance outside range of chi/Q file.	scenario
ISOSUB: SLTH = 0. Execution terminated in subroutine CYL	scenario
ISOSUB: SLTH = 0. Execution terminated in subroutine DISC	scenario
ISOSUB: VOLUME=0, execution terminated in subroutine ENDCYL	scenario
ISOSUB: X=0. Execution terminated in subroutine DSCSRC	scenario
LS2: Error return for LSODES2, ISTATE = xxx RWORK(11 to 14) aaa bbb ccc ddd IWORK(11 to 26) eee fff ggg hhh ...	program
METLIB: Alkaline Earth organs expected.	program
METLIB: No data for xxx; skipped.	warning
METLIB: Too many organs: xxx.	program/ file
NRGLIB: Energy library out of order. RMDLIB: xxxxxx ENERGY: yyyyyy	program/ file

TABLE B.1. (contd)

Error Message	Error Type
NUCTST: Too many radionuclides in this case (Max=100): xxxx	scenario
OPNFIL: Invalid value for IMODE: xxx	program
OPNFIL: Invalid value for LUN: xxx	program
ORDIN: INTDF can only handle 8-member chains.	program
REDFIL: File titles do not match, LUN 11 and 13. Assumed to be invalid case.	scenario
REDSET: Internal dose factors not found for xxxxxx.	warning
RLIBIN: Decay chain xxxx has improper order. Current member is yyyy After zzzzzz.	program/ file
RLIBIN: Improper number of radionuclides in library: xxxx.	program
SIJLIB: Target organ index is 0 (IT,IORG(it): xxx yyy.	program
SWCAL: DYXU = 0.0, invalid (divide by zero).	program
SWCAL: DZXU = 0.0, invalid (divide by zero).	program
SWCAL: The dilution calculation has failed. A value of 1E-20 will be returned for the mixing ratio.	warning
WBEDE: Invalid master organ index ...	program
WBEDE4: Invalid master organ index ...	program
XQCAL: MI location selection error: Direction index: xxx Distance: yyy	scenario
XQIN: Invalid INOPT in XQIN	program

EXHIBIT B.1. Software Change Packet

PNL SOFTWARE CHANGE PACKET Change Packet Number [ ]

Software Package: GENII Hanford Environmental Dosimetry System

Program (indicate): APPRENTICE ENVIN ENV DOSE INTDF EXTDF DITTY

Document Title: Napier B. A., R. A. Peloquin, D. L. Strenge, and J. V. Ramsdell. 1988. Hanford Environmental Dosimetry Upgrade Project. The Hanford Environmental Radiation Dosimetry Software System. Vol I, II, and III. PNL-6584, Pacific Northwest Laboratory, Richland, WA.

CHANGE(S) AND/OR PROBLEM(S) REPORTED

(To be completed by person requesting change)

PROBLEM DOCUMENTATION INCLUDED

____ Input file that demonstrates problem
____ Error message
____ Output file annotated to demonstrate problem

Submitted by: _____ _____
Change Requester Date

Approved by: _____ _____
PNL GENII Designated Expert Date

Send to: B. A. Napier
Senior Research Scientist
Environmental Health Physics K3-54
Pacific Northwest Laboratory
Richland, WA 99352

GENII - HANFORD ENVIRONMENTAL DOSIMETRY SOFTWARE SYSTEM
TECHNOLOGY TRANSFER PACKAGE

ABSTRACT

The Hanford Environmental Dosimetry Upgrade Project was undertaken to incorporate the internal dosimetry models recommended by the International Commission of Radiological Protection (ICRP) and the Department of Energy (DOE) in updated versions of the environmental pathway analysis models used at Hanford. The resulting second generation of Hanford environmental dosimetry computer codes is compiled in the Hanford Dosimetry System (Generation II, or GENII). The purpose of this coupled system of computer programs is to analyze the effects of environmental contamination resulting from acute or chronic releases to, or initial contamination of, air, water, or soil. This is accomplished by calculating radiation doses to individuals or populations.

This version of the GENII Software System was prepared to accommodate the needs of the NPR-EIS radiological consequences task. The acute food pathway models have been modified in GENII to better account for acute or accidental atmospheric contamination of food and fodder by ^{3}H and ^{14}C. Documentation of these modifications is included in this transfer package.

NEW FEATURES

The average air temperature, mixing layer thickness, and surface roughness parameters may now be specified as input parameters for air exposure scenarios. Also, the available probability levels to use for acute air exposures have been changed. Acute atmospheric release tritium and carbon models have been added. The user may now specify the absolute humidity used in carbon and tritium calculations. The format of the summary report has been modified.

Additional Air Exposure Input Parameters

The additional air exposure parameters may now be entered in the joint frequency file. The second line of the file, previously reserved for descriptive information, may optionally be used to specify these parameters. To exercise this feature, the second line should be formatted as follows:

Field 1 -The first character of the record must contain an '@' sign if input is to performed on this record.

Field 2 -Average air temperature (degrees C). Program default: 15.0. (Free-formatted read.)

Field 3 -Atmospheric mixing layer thickness (m). Program default: 1000.0. (Free-formatted read.)

Field 4 -Surface roughness length (m). Program default: 0.03. (Free-formatted read.)

Change in Available Probability Levels

The available probability levels for use with acute air exposures have been changed from 1.0%, 5%, 10%, 25%, and 50% to 0.5%, 5%, 10%, 25%, and 50%. The default selection is 5%. This parameter value may be changed in the DEFAULTIN file by changing the index of the specified probability for the parameter labeled PRCNTI, where:

1 indicates 0.5%
2 indicates 5%
3 indicates 10%
4 indicates 25%
5 indicates 50%.

NATIONAL ENERGY SOFTWARE CENTER
MASTER COPY
REFERENCE
ABSTRACT 9465

Absolute Humidity Default Parameter Value

The parameter default value input file (DEFAULT.IN) has been modified to allow the user to specify the absolute humidity used in carbon and tritium calculations. Heading and blank lines in the file (not processed by GENII) have been rearranged to allow the user to specify this parameter while maintaining DEFAULT.IN file-compatibility with other versions of GENII. The parameter is specified in units of kg/m^3. A listing of the modified version of DEFAULT.IN is included in this transfer package; refer to lines 6 and 7 of the file for changes.

Acute Atmospheric Release Tritium and Carbon Models

ADDENDUM TO PNL-6584, Volume 1, Section 4.7.9
ACUTE ATMOSPHERIC RELEASE TRITIUM AND CARBON MODELS

The models for atmospheric contamination of food and fodder by ^3H and ^{14}C described in Section 4.7.9 apply only to chronic atmospheric source terms. Acute or accidental releases of these radionuclides will not result in the same levels of contamination of vegetation, and the models were thus not appropriate for use with acute releases without some modification.

Two modifications were required. One modification describes the non-attainment of equilibrium between the atom ratios of tritium and hydrogen, or ^{14}C and stable carbon, in the vegetation during the contamination incident. The second is a variant on the consumption integral defined in Section 4.7.6 and Equation 4.7.19.

Studies on the dynamics of tritium uptake and desorption from vegetation have been performed and documented (Fellows, Cataldo, Ligotke, and Napier 1989). For leafy vegetation, this work has shown that tritium enters the free water in the plant and reaches an atom ratio equilibrium, air moisture to plant moisture, very quickly. For alfalfa and grape leaves, this occurred in times of four to eight hours. This is rapid enough that an assumption of complete equilibrium being reached during the course of the accident is not overly conservative.

Uptake of ^{14}C into plants follows that of naturally-occurring carbon. It is slower than that of tritium - following more the growth-dependent fixation of carbon in the plant structure. It is reasonable to assume that any new growth would fix ^{14}C/carbon at ratios the same as in the air during the period. However, only a small portion of the total plant mass would be fixed during the plume passage. Therefore, an approximation to the fractional equilibrium attained is the percentage of plant growth that occurs during the contaminating incident. This is described as t/te_p, where te_p is the duration of the growing period for plant type p, as defined in Section 4.7.4.

The work by Fellows, et al., also showed that tritium is quickly released from the plant back to the atmosphere following removal of the contaminating air. Very little of the tritium is incorporated into the organic portions of the plant. Depending on whether it is day or night, the desorption half-time for tritium varies between two and eight hours. This is fast enough that the decay term in the consumption integral of equation 4.7.19 may be replaced with a simplifying $1/\lambda$, where λ represents the rate constant derived from the desorption half-time of tritium from vegetation, which may conservatively be placed at eight hours.

Little experimental work is available describing the desorption of ^{14}C from vegetation. It seems reasonable to expect that organically-bound carbon will not re-equilibrate very quickly. Since the radiological half-life of ^{14}C is quite long compared to a single year, the consumption integral for ^{14}C reduces to 1.0.

Reference for Addendum

Fellows, R.J., D.A. Cataldo, M.W. Ligotke, and B.A. Napier. 1989. Transfer of Atmospheric Tritiated Water to Foliage and Fruit of Crops, Pacific Northwest Laboratory, Richland, Washington (in press).

OPERATIONAL CHANGES

The format of the summary report file, DOSEQA.OUT, has been modified to report the inhalation EDE, ingestion EDE, external EDE, total EDE, and maximum organ dose. Previously the inhalation EDE, ingestion EDE, external EDE, internal EDE, and total EDE.

CORRECTIONS APPLIED SINCE DISTRIBUTION VERSION 1.351

The finite plume external dose calculation to an individual was off by a factor of inverse windspeed. This problem has been corrected.

Joint frequency data was being improperly incorporated for acute atmospheric releases. Essentially, the information being processed was for a direction 180 degrees away from that selected. This resulted in answers that applied to one direction being attributed to another. This problem has been corrected.

When modeling ground-level atmospheric releases with joint-frequency data from monitoring data located at heights greater than 15 m, an "invalid argument value for LOG" error occurs. Most of this has been corrected, but there is still the possibility of an error message. Should an error occur, investigate the appropriateness of the joint frequency file for the application at hand.

The wrong result was reported for the air submersion dose for the acute finite plume model when the user specified input units of Sv. This problem has been corrected.

Inappropriate decay of daughter radionuclides was occurring in the acute residential soil compartment. This affected the external exposure and inhalation from resuspended material doses. This problem has been corrected.

Decay of radionuclides in the terrestrial food pathway for the holdup period for chronic exposures was not being performed. This has been corrected.

The code now functions properly when the user specifies the maximum individual location and inputs a chi/Q file for chronic exposures. Previously, a divide-by-zero error occurred.

In surface water transport scenario, an "invalid number" error could occur for certain values of the mixing ratio parameter. This parameter was being read as an integer value instead of a REAL. This problem has been corrected.

Zero doses were reported for terrestrial food and animal product ingestion pathways when a basic air concentration was input. This problem has been corrected.

Accumulators were not being reinitialized for: 1) air submersion cumulative dose for chronic exposure finite-plume calculations when the release period was shorter than the dose period, and 2) acute exposure by season, radionuclide inhalation and ingestion EDEs (EDE by radionuclide report only). These problems have been corrected.

An indexing error for the terrestrial food pathways within the acute, atmospheric, tritium release model has been corrected. The net effect of this error was to underpredict ingestion dose for acute atmospheric releases of tritium by about 11%.

A dimensioning error in the acute animal product contamination model has been eliminated. This seems to have had negligible impact on calculated results, but has now been made internally consistent.

The internal dose factor generation has been made more consistent with ICRP Publication 30 and 48 recommendations. Revisions to the metabolic data are described in a separate report by P. D. Rittmann.

TRANSFER PACKAGE CONTENTS

The GENII Software Package is distributed on either 5.25-inch 1.2 megabyte disks, or on 3.5-inch 1.4 megabyte disks. An automatic install procedure has been included with the software.

MINIMUM SYSTEM REQUIREMENTS

The GENII Software Package will run on an IBM-AT or equivalent computer configured with an 80287 math co-processor, 640 kilobytes random-access memory, a minimum of 5 megabytes on-line disk storage, and operating under IBM DOS 3.1 or newer version.

INSTALLATION OF SOFTWARE PACKAGE ON COMPUTER

An automatic install procedure has been included with the software. GENII is now distributed in a public-domain compressed archive format. The install procedure will copy and then unpack the files from the distribution floppy disks. A copy of the public-domain archiver program (ZOO Version 1.1 written by Rahul Dhesi, 1986) is included on the distribution floppies.

To install the GENII Software Package, do the following:

1) If you have not previously installed GENII on your computer, create a subdirectory named GENII by typing:

   MD \GENII

   and press Enter.

2) Insert the GENII Distribution Disk #1 in a high-density floppy disk drive and type:

   n:

   and press Enter, where n is the letter designation of the floppy disk drive.

3) Type:

INSTALL x: a:

and press Enter, where x designates the hard disk you wish GENII to be installed on and a designates the floppy disk drive that you are using.

4) Respond as requested by the install procedure. If you have a previously-distributed version of GENII on your hard disk, the archive procedure will ask whether to overwrite the older files. Respond with A for All.

If errors occur during the installation procedure, reboot the host computer and reinstall.

For the GENII Software Package to function properly, the following commands must be in the CONFIG.SYS file in the root directory of the disk drive used to boot the system:

```
FILES=20
BUFFERS=24
DEVICE=ANSI.SYS
```

Refer to the IBM DOS reference manual (IBM 1985) for details on installing these commands.

REFERENCES

International Business Machines (IBM) Corporation. 1985. Disk Operating System Version 2.1 Reference. IBM Corporation, Boca Raton, Florida.

SOFTWARE PACKAGE CONTENTS

GENII Distribution Disk # 1:

ZOO	EXE	36856	1-31-87	3:51p
INSTALL	BAT	512	6-27-90	2:06p
INSTALL2	BAT	512	12-03-90	3:41p
GEN1-1	485	1022860	12-14-90	2:25p

Archive gen1-1.485:

Length	CF	Size Now	Date	Time	
256	54%	117	9 Feb 88	11:15:58	/v1.485/airrel.in
10624	61%	4190	2 Dec 88	17:11:04	/v1.485/apprenti.dat
189710	27%	138898	3 Dec 90	14:26:12	/v1.485/apprenti.exe
45331	75%	11301	1 Dec 88	17:12:16	/v1.485/aprhelp1.dat
51667	79%	11088	1 Dec 88	17:12:28	/v1.485/aprhelp2.dat
6656	76%	1613	30 Aug 88	11:49:26	/v1.485/bioacl.dat
3712	58%	1558	3 Apr 90	12:15:08	/v1.485/default.in
444624	76%	104588	3 Dec 90	14:23:44	/v1.485/ditty.exe
476	24%	360	28 Sep 88	08:30:30	/v1.485/ditty.in
245314	71%	70091	3 Dec 90	14:32:12	/v1.485/dose.exe
162992	58%	68825	3 Dec 90	09:37:26	/v1.485/dosinc.dat
68	0%	68	3 Dec 90	10:03:44	/v1.485/dosinc.out
2816	77%	647	11 Jun 88	15:53:46	/v1.485/dossum.dat
100507	74%	26296	3 Dec 90	10:02:28	/v1.485/dsfct30.dat
205440	66%	70144	3 Dec 90	12:40:48	/v1.485/energy.dat
286568	64%	103698	3 Dec 90	14:30:14	/v1.485/env.exe
309575	61%	122274	3 Dec 90	14:27:48	/v1.485/envin.exe
299783	66%	101623	3 Dec 90	14:33:34	/v1.485/extdf.exe
384	47%	204	5 Aug 88	16:16:20	/v1.485/extdf.in
1408	61%	553	30 Nov 88	11:47:26	/v1.485/filename.dat
7168	70%	2119	29 Aug 88	12:27:06	/v1.485/ftrans.dat
15488	74%	3967	14 May 90	08:43:32	/v1.485/gamen.dat
17408	63%	6431	8 May 90	12:38:06	/v1.485/grdf.dat
490104	70%	147686	3 Dec 90	14:33:02	/v1.485/intdf.exe
512	29%	362	5 Aug 88	17:03:38	/v1.485/intdf.in
10752	62%	4078	12 Jul 88	14:10:36	/v1.485/isolib.dat
22753	75%	5722	14 Dec 90	14:25:36	/v1.485/metadata.dat
16256	60%	6530	12 Mar 90	15:47:02	/v1.485/params.dat
3328	64%	1206	14 May 90	10:28:56	/v1.485/rmdbyele.dat
13440	69%	4153	29 Nov 90	16:24:14	/v1.485/rmdlib.dat

GENII Distribution Disk # 2:

GEN2-1 485 767922 12-03-90 3:17p

Archive gen2-1.485:

Length	CF	Size Now	Date	Time	
12336	60%	4903	27 Sep 88	16:34:42	/v1.485/sam/sample1.in
15814	68%	5098	3 Dec 90	14:56:56	sample1.485
10752	56%	4684	5 Aug 88	16:02:24	/v1.485/sam/sample2.in
17930	69%	5577	3 Dec 90	14:57:24	sample2.485
10880	57%	4675	28 Sep 88	14:36:36	/v1.485/sam/sample3.in
33118	76%	7796	3 Dec 90	14:58:46	sample3.485
11264	58%	4775	5 Aug 88	16:12:30	/v1.485/sam/sample4.in
12999	68%	4097	3 Dec 90	14:59:34	sample4.485
512	29%	362	5 Aug 88	17:03:38	/v1.485/sam/sample5.in
6249	60%	2479	3 Dec 90	15:01:00	sample5.485
384	47%	204	5 Aug 88	16:16:20	/v1.485/sam/sample6.in
6135	55%	2783	3 Dec 90	15:02:22	sample6.485
476	24%	360	28 Sep 88	08:30:30	/v1.485/sam/sample7.in
29365	72%	8358	3 Dec 90	15:02:44	sample7.485
2944	63%	1092	14 May 90	11:37:30	/v1.485/sam/sample.bat
4224	73%	1143	10 Mar 88	08:50:42	/v1.485/sam/jf20089.ave
1536	67%	505	19 Feb 88	13:45:26	/v1.485/sam/pop200.87
22784	95%	1126	21 Sep 87	09:07:14	/v1.485/see.in
381720	52%	183080	28 Aug 88	13:59:36	/v1.485/see1.dat
640893	52%	307038	28 Aug 88	14:04:52	/v1.485/see2.dat
408226	47%	214593	30 Nov 87	14:43:02	/v1.485/see3.dat
2888	54%	1338	28 Sep 88	08:40:30	/v1.485/watrel.in
143	4%	137	3 Dec 90	15:17:54	/v1.485/work.buf

MODIFIED VERSION OF DEFAULT.IN

GENII Default Parameter Values (28-Mar-90 RAP)

```
INVENTORY PARAMETERS-----------------------------------------------------------
0.037, 3.7E4, 3.7E7, 3.7E10, 1.0          NVU     Source input conversion
1.0, 0.15, 224.0                          SVU     Soil source conversion
ENVIRONMENTAL PARAMETERS-------------------------------------------------------
0.008                                     ABSHUM  Absolute humidity (kg/m3)
2                                         PRCNTI  Air dispersion conserv. flag
0.001                                     DPVRES  Deposition vel./resuspension
1.0E-9                                    LEAFRS  Leaf resuspension factor
2.0,2.0,3.0,0.8,0.8,0.8,1.0,0.8,1.0,1.5   BIOMAS  BIOMA2 Biomass (kg/m2)
0.25                                      DEPFR2  Interception frac./irrigate
15.0                                      SURCM   Depth of surface soil (cm)
224.0                                     SLDN    Surface soil density (kg/m2)
1.5E3                                     SSLDN   Soil density (kg/m3)
True                                      HARVST  Harvest removal considered?
410.0                                     SOLING  Soil ingested (mg/da)
14.0                                      WTIM    Weathering time (da)
1.0, 0.1, 0.1, 0.1                        TRANS   Translocation, plants
0.1, 0.1, 0.1, 0.1, 1.0, 1.0              TRANSA  Translocation, animal food
68.0, 0.12, 55.0, 0.12, 68.0, 55.0        CONSUM  Animal Consumption (kg/da)
50.0, 0.3, 60., 0.3                       DWATER  Animal drinking water (L/da)
0.0, 0.8, 1.0, 0.8                        FRACUT  Acute fresh forage by season
0.2, 0.3, 0.5, 1.0                        SHORWI  Shore width factors
0.02                                      INGWAT  Swim water ingested (L/hr)
25295.0                                   TCWS    H2O/sed. transfer (L/m2/yr)
0.4,  5.0, 4.0                            YELDBT  BIOT: Veg. prod. (kg/m2/yr)
9.41E-4, 2*7.48E-4                        TOTEXC  BIOT: Excavation (m2/m3-yr)
1.0, 0.81, 0.19, 0.02, 0.008, 0.002,      EXCAV   BIOT: Frac. soil brought to
1.0, 0.9, 0.096, 0.006, 0.0005, 0.0005,           surface from within the
1.0, 0.9, 0.096, 0.006, 0.0005, 0.0005            waste by animal excavation
270.0                                     RINH    Chronic breathing (cm3/sec)
330.0                                     RINHA   Acute breathing (cm3/sec)
10                                        NDIST   Number of distances
805.0, 2414.0, 4023.0, 5632.0, 7241.0,
12068.0, 24135.0, 40255.0, 56315.0,
72405.0                                   X       JF/chi/Q/pop grid dist. (m)

0.1, 0.25, 6*0.18, 2*0.2                  DRYFAC, DRYFA2 dry/wet ratio
METABOLIC PARAMETERS-----------------------------------------------------------
0.5, 50.0, 500.0                                  XDIV
0.5,  0.5,  0.95, 0.05,  0.8, 0.0, 0.0,   0.2, 0.0,   ADJ
0.1,  0.9,  0.5,  0.5,  0.15, 0.4, 0.4,  0.05, 0.0,
0.01, 0.99, 0.01, 0.99, 0.05, 0.4, 0.4, 0.135, 0.015

DOSE PARAMETERS----------------------------------------------------------------
0.25, 0.15, 0.12, 0.12, 0.03, 0.03, 5*0.06        WT   Weighting factors
2.0                                               SI2I Semi-infinite/inf
```

PNL SOFTWARE CHANGE PACKET

Change Packet Number 1.

Software Package: GENII: Hanford Environmental Dosimetry System

Program(s) (indicate): APPRENTICE ENVIN ENV DOSE
INTDF EXTDF DITTY

Project title: Hanford Dose Overview

Project number: 10878

Design document: Appendix to Part 1 of document.

Document title: B. A. Napier, R. A. Peloquin, D. L. Strenge, and J. V. Ramsdell. 1988. Hanford Environmental Dosimetry Upgrade Project. GENII - The Hanford Environmental Radiation Dosimetry Software System Part 1: Conceptual Representation, Part 2: Users Manual. PNL-6584. Pacific Northwest Laboratory. Richland, WA.

CHANGE(S) REQUESTED AND/OR PROBLEM(S) REPORTED
(To be completed by person requesting change)

PROBLEM DOCUMENTATION INCLUDED

Submitted by: _____ _____
Change Requester Date

Approved by: _____ _____
PNL GENII Designated Expert Date

Send to: B. A. Napier
Staff Scientist
Health Physics Department, MS K3-54
Pacific Northwest Laboratory
Richland, WA 99352

Revised Dose Increment Libraries for GENII
by Paul D. Rittmann, PhD CHP

There have been minor changes to the INTDF.EXE program which prepares the dose increment factors for use by the GENII programs. In addition, the METADATA.DAT and RMDLIB.DAT libraries used by INTDF have been revised. Therefore, with assistance from the PNL code custodian, the default dose increment library (DOSINC.DAT) and the internal dose factor file for DITTY (DSFCT30.DAT) were computed using the revised code and data files. In addition, dose increment libraries were prepared using the allowed solubility choices in ICRP 30, and a special library with worst-case choices was also made. This report summarizes how the new libraries were computed and provides a batch file to facilitate the selection of solubility library for GENII calculations.

The new dose factors in most cases differ from the original library by less than 20 percent. Plutonium ingestion doses all decrease about a factor of 8, but have never been that important compared to the inhalation dose. The two most strongly affected nuclides were Te-129m and Fr-223. The EDE for Te-129m decreased by a factor of 20, while the EDE for Fr-223 increased by 67 percent. These changes reflect a correction made in INTDF.

Data Library Revisions:

The human metabolic data library was modified to improve agreement with ICRP 30. A complete summary of all changes to the METADATA.DAT library used by INTDF is given below.

Changes to METADATA.DAT

Fluorine	-	Changed the transfer compartment removal rate constant from 34.6 to 49.9, corresponding to removal half-times of 29 minutes and 20 minutes respectively. The retention in the bone was changed from 100 days to 99999 days to better approximate indefinite retention.
Sodium	-	For "other" organs, the retention halflife was changed from 15 days to 10 days to agree with ICRP 30.
Silicon	-	Added f1 values for Class D and Class Y
Potassium	-	Changed the transfer compartment removal rate constant from 20.0 to 99.9 to better approximate the "instantaneous translocation" mentioned in ICRP 30.
Cobalt	-	Changed the Class D f1 from 0.8 to 0.3 for use in the worst case dose increment run.
Yttrium	-	Changed the retention halflives for all organs from 8000 days to 99999 days to better approximate indefinite retention in these organs.
Technetium	-	Revised the transfer fractions and retention half-lives to match ICRP 30.
Indium	-	Changed the retention halflives for all organs from 8000 days to 99999 days to better approximate indefinite retention in these organs.
Antimony	-	Changed the transfer compartment removal rate constant from 16.64 to 2.77, corresponding to removal half-times of 1 hour and 6 hours, respectively.
Dysprosium	-	Deleted the extra atomic number line, and corrected the spelling of the element name.
Tantalum	-	Deleted the second (duplicate) data block.
Gold	-	Changed the transfer compartment removal rate constant from 2.77 to 99.9 to better approximate the "instantaneous" transfer mentioned in ICRP 30.
Thallium	-	Changed the transfer compartment removal rate constant from 2.77 to 99.9 to better approximate the "instantaneous" transfer mentioned in ICRP 30.
Lead	-	For "other" organs, the retention halflife was changed from 12000 days to 10000 days to agree with ICRP 30.

Francium - Changed the metabolic model from being a copy of cesium to being the simpler one in ICRP 30.

Actinium - For the "liver", the retention halflife was changed from 15000 days to 14600 days to agree with ICRP 30. The ovaries were added to the list of organs. The retention halflife for both the testes and ovaries was set to 99999 days to approximate indefinite retention.

Neptunium - For the "liver", the retention halflife was changed from 15000 days to 14600 days to agree with ICRP 30. The ovaries were added to the list of organs. The retention halflife for both the testes and ovaries was set to 99999 days to approximate indefinite retention.

Plutonium - Changed the f1 for Class Y from 0.0001 to 0.00001. The ovaries were added to the list of organs. The retention halflife for both the testes and ovaries was set to 99999 days to approximate indefinite retention.

Americium - The ovaries were added to the list of organs. The retention halflife for both the testes and ovaries was set to 99999 days to approximate indefinite retention.

Curium - The ovaries were added to the list of organs. The retention halflife for both the testes and ovaries was set to 99999 days to approximate indefinite retention.

Californium- The ovaries were added to the list of organs. The retention halflife for both the testes and ovaries was set to 99999 days to approximate indefinite retention.

General - Arranged the entries in atomic number order, leaving the Infant data unchanged at the end of the file. Added metabolic data for magnesium, aluminum, titanium, vanadium, and platinum. For platinum, the adrenals were not included due to the 3 organ limit in INTDF.

The original version of METADATA.DAT is listed in PNL-6584, Volume 3, beginning on page 5.725. All the f1 values in METADATA.DAT were verified by comparison with ICRP 30 and ICRP 48. All of the retention function data was verified to be in agreement with ICRP 30, with the exception of four alkaline earth elements, Ca, Sr, Ba, and Ra. The data for these elements produces an approximation to the model recommended in ICRP 30. It was assumed to be correct.

The other minor exception to ICRP 30 is the omission of organs with essentially no effect on the EDE for three elements. The selenium model leaves out the pancreas, the niobium model leaves out the testes, and the platinum model leaves out the adrenals. In all three cases, the amounts which were to leave the transfer compartment and go to the missing organ were redirected to the "Other" organs.

The radionuclide data library, RMDLIB.DAT, was also modified. A complete summary of all changes to RMDLIB is given below.

Changes to RMDLIB.DAT

Sr-85 - Halflife changed from 65 days to 64.8 days.

Sr-87m - Changed the decay chain so it is now a parent of Rb-87.

In-111 - Halflife changed from 2.8 days to 2.83 days.

Pd-109 - Bone distribution model changed from volume to surface per ICRP 30.

Sn-121 - Bone model also changed from volume to surface per ICRP 30.

Cd-115m - Removed from the Cd-115 decay chain since it was neither a parent or a daughter.

Cs-134m - Changed the decay chain so it is now the parent of Cs-134.

U-233 - Removed from being a daughter of the Np-237 & Pa-233 chain. The original Np-237 chain was split into two chains.

Pu-236 - Changed the decay chain so it is now the parent of U-232.

Pu-237 - Changed the decay chain so it is now a parent of Np-237.

Am-242m - Decay chain modified to include Np-238.

The original version of RMDLIB.DAT is listed in PNL-6584, Volume 3, beginning on page 5.719.

Additional dose increment files were prepared to offer added solubility choices on the dose factors. Three of the new libraries were prepared using the most soluble (D), least soluble (Y), or intermediate solubility (W) choices as defined in ICRP 30. The fourth library (MAX) has the worst case solubilities for all isotopes. The solubility choices for each library are listed in Attachment 1.

The MAX library was prepared using worst case solubility assignments for every nuclide with four exceptions. The first is for isotopes of strontium. The worst case inhalation dose comes from class Y, $SrTiO_3$. However, this compound is rare, and can be considered to be not attainable during transport through environmental media. The other three exceptions were for Rh-103m, Sb-126m, and Te-129, due to their short radioactive decay half-lives (less than one hour). It was assumed that they would follow the chemical forms of their parent nuclides, Ru-103, Sn-126, and Te-129m, respectively.

INTDF (Version 1.483) Computations:

The runs were complicated by the fact that INTDF allows only 100 nuclides at a time. Therefore, the nuclides in RMDLIB.DAT were sorted by atomic number and atomic mass number, divided into three lists, and placed in three input files. The inert gases were deleted (except for Rn-222, although it was dropped by INTDF anyway). The input files are included in Attachment 2. Note that increments for 70 years were computed, just as in the previous dose increment library. This allows GENII to compute doses using dose commitment periods of up to 70 years. The input files for the DITTY internal dose factors are these input files with the Acute flag set to false.

Due to another limitation of INTDF, decay chains with more than 8 members may have convergence problems. Thus U-232 and Pu-236, which make the Th-232 chain into a 9 member chain were omitted from the third input file. Another input file was used just for U-232 and Pu-236. This input file was used with a modified RMDLIB.DAT file which contains only the Pu-236 decay chain, with Th-232, Ra-228, and Ac-228 omitted. The revised RMDLIB information is shown below. This special radionuclide library was used in a separate run to compute the cobalt ingestion factors for the worst-case library, as well as the information for Pu-236 in all libraries.

Modified Version of RMDLIB.DAT for Cobalt, U-232 and Pu-236

```
C057     2.71E+2 1 0 0.0000 0 0.0000  27     ND
C058     7.08E+1 1 0 0.0000 0 0.0000  27     ND
C060     1.92E+3 1 0 0.0000 0 0.0000  27 T   ND

PU236    1.04E+3 1 0 0.0000 0 0.0000  94     SW
U 232    2.36E+4 2 1 1.0000 0 0.0000  92     VD
TH228    6.98E+2 3 2 1.0000 0 0.0000  90     SW
RA224    3.62E+0 4 3 1.0000 0 0.0000  88   1 SW 2 RN220   1.000 PO216   1.000
PB212    4.43E-1 5 4 1.0000 0 0.0000  82     SD
BI212    4.20E-2 6 5 1.0000 0 0.0000  83     ND 2 PO212   .6407 TL208   .3593
```

The INTDF program did not calculate dose increments for the nuclides Be-7, N-13, Rb-90, Rb-90m, Sb-129, and Cs-139. No metabolic data is available for nitrogen, and no specific effective energy data is available for the others. If these nuclides are used in a GENII run, there will be a warning message to the user during execution that no internal dose increment data was found. In addition, if the user selects a printout by nuclide, all of the internal doses for these nuclides will be zero.

After the INTDF runs, the computed results for U-232 and Pu-236 were inserted in the third group of output files. Then the three pieces of dose increment tables from the three input files were combined using the DOS copy command. UNFORMAT.EXE was run on this combined increment file to produce the new dose increment libraries.

For the worst-case library (MAX), there are seven elements having more than one value for f1. These are Co, Sr, Mo, Sb, Hg, U, and Pu. Since chemical changes may occur during transport through the food chain, it was necessary to evaluate which of the allowed f1 values would produce the greatest dose. The ingestion dose commitment factors in Federal Guidance Report Number 11 were used to determine the worst case assumptions. Later comparisons between the MAX library and the others has confirmed that the choices were correct. The results of the review are given below, along with how the dose increment tables for MAX were modified prior to running UNFORMAT.

Cobalt - For each nuclide, the largest doses came from the f1 of 0.3, which may be found in environmental media. Thus, the ingestion dose increments for the f1 value of 0.3, were substituted for the increments based on an f1 of 0.05, which is normally used with inhalation class Y. METADATA.DAT contains the f1 value of 0.3 under class D cobalt.

Strontium - There are two choices for strontium: $SrTiO_3$ and everything else. In the worst-case library, the normal class D assignments were used.

Molybdenum - The worst inhalation doses come from class Y compounds. However, the worst ingestion dose depends on the nuclide. For Mo-93, the f1 for class D gives larger doses, while for Mo-99, the f1 associated with class Y gives larger doses. INTDF was run using class Y, and the class D ingestion dose increments were substituted for Mo-93 using a word processor.

Antimony - The worst-case inhalation and ingestion doses are from class W compounds. The only exception is Sb-126m, with a 19 minute halflife. It was assumed to follow its parent, Sn-126, for which the worst case is also class W compounds.

Mercury - There are two distinct metabolic models for organic and inorganic compounds of mercury. The model for organic compounds gives the greatest doses, and was used here. The model for inorganic compounds is present in METADATA.LIB, but is not used because it is placed after the organic data.

Uranium - The worst case inhalation doses come from class Y compounds. The worst case ingestion doses (with two exceptions) come from compounds with f1 corresponding to class D or W. Thus, in the MAX library, uranium was run using class Y, and the class D ingestion dose increments were substituted using a word processor. The two exceptions are U-237 and U-240. For these two no substitution was made since the f1 associated with class Y gives the worst dose.

Plutonium - The worst case inhalation and ingestion doses come from class W compounds. The only exception is for Pu-237 inhalation. However, for Pu-237 the difference between class W and Class Y is small, so all plutonium isotopes were assumed to be class W.

Note that the MAX library is the only one with the above substitutions of worst-case ingestion dose factors for the normal, ICRP 30 values.

Application of the New Dose Increment Libraries:

To facilitate the use of the new dose increment libraries, a DOS batch file was created to allow the user to select which library to use in a given run. The name of the batch file is CLASS.BAT. Instructions are provided with the file. Simply type "CLASS" at the DOS prompt, and the following information will appear on the screen:

```
++++++++++++++++++  Instructions for CLASS.BAT  ++++++++++++++++++

   Purpose:  Install alternate Dose Factor libraries for GENII.

   First Parameter:   Identifies which library to use.
         D, W, Y  =  Lung Clearance Time (days, weeks, years)
             MAX  =  Worst Case Solubility Assignments
             PNL  =  PNL Solubility Assignments
             OLD  =  Original Dose Factor Library (8/29/88)

   Example:  For a UNH release (Class D), type  CLASS D
             before starting the GENII run.

   Note:   Different solubility classes may give different doses
           for both inhalation and ingestion.
++++++++++++++++++++++++++++++++++++++++++++++++++++++++++++++++++++
```

The CLASS batch file only needs to be used when changing the library in use. Once the library is changed, it remains in use until an alternate library is selected. The only thing this batch file does is to copy the requested library onto DOSINC.DAT, DOSINC.OUT and DSFCT30.DAT. The listing for the CLASS.BAT file is given in Attachment 3.

Do not assume that all the elements in a library have the same chemical form. For example, suppose a solution of nitrates is released. It happens that nitrates of technetium are listed as class W in ICRP 30, with D and W being allowed forms. However, nitrates of ruthenium are class D, with allowed forms of ruthenium being class D, W or Y.

ICRP 30 or Federal Guidance Report Number 11 should be consulted for information on the appropriate solubility assumptions to make for each chemical form. Where the chemical form is uncertain, use the more conservative choice.

Installing the New Libraries:

The new dose factor distribution disk comes with the following files:

INSTALL.BAT	4043	11-28-90	2:45p
ZOO.EXE	36856	1-31-87	3:51p
ZOO.DOC	39357	8-24-86	1:03p
CLASS.ZOO	481733	12-03-90	10:03a
CDE-70.ZOO	126894	12-03-90	9:35a
CDEINC.ZOO	389880	12-03-90	9:35a
ALL-DF.ZOO	71354	12-03-90	10:11a

The first is a batch file to copy the CLASS.ZOO file from the distribution disk, and unpack it. The original DOSINC.DAT and DOSINC.OUT files are renamed CLASS-OL.BIN and CLASS-OL.TXT respectively. The original DITTY internal dose factor file DSFCT30.DAT is renamed DITTY-OL.DSF.

The CLASS.ZOO file contains the following files:

```
class.bat   -- batch file to substitute new dose factor files

class-d.bin -- very soluble libraries
class-d.txt
ditty-d.dsf

class-w.bin -- soluble libraries
class-w.txt
ditty-w.dsf

class-y.bin -- insoluble libraries
class-y.txt
ditty-y.dsf

class-pn.bin -- original PNL solubility choices rerun
class-pn.txt
ditty-pn.dsf

class-ma.bin -- worst case solubilities
class-ma.txt
ditty-ma.dsf
```

A table of the lung model classifications used in each library is given in the first attachment.

The CDE-70.ZOO file contains the 70 year committed dose equivalent per unit intake for each organ and each radionuclide. This archive contains 5 files, one for each library. Similarly, the CDEINC file contains the dose increments for acute releases.

The ALL-DF.ZOO file contains a compilation of dose factors for all libraries, and includes the Effective Dose Equivalent (EDE).

To install these libraries, type A:INSTALL, or B:INSTALL, depending on whether the disk is in drive A: or B:. An instruction screen appears which will remind you of two things. The first is to change to the directory with the GENII programs first. The second is to type the names of two drive letters. One is the letter of the drive with the distribution disks, the other is the letter of the drive with the GENII programs.

D = Very Soluble Library
W = Moderately Soluble Library
Y = Insoluble Library
PNL = PNL Default Library
MAX = Worst Case Solubility Library

Nuclide	D	W	Y	PNL	MAX
H 3	D	D	D	D	D
BE7	W	W	Y	Y	Y
BE10	W	W	Y	Y	Y
C 14	D	D	D	D	D
N 13	D	D	D	D	D
F 18	D	W	Y	D	D
NA22	D	D	D	D	D
NA24	D	D	D	D	D
SI31	D	W	Y	W	Y
P 32	D	W	W	D	W
P 33	D	W	W	D	W
S 35	D	W	W	W	W
CL36	D	W	W	D	W
AR39	D	D	D	D	D
AR41	D	D	D	D	D
K 40	D	D	D	D	D
CA41	W	W	W	W	W
CA45	W	W	W	W	W
SC46	Y	Y	Y	Y	Y
CR51	D	W	Y	Y	Y
MN54	D	W	W	W	W
MN56	D	W	W	W	D
FE55	D	W	W	W	D
FE59	D	W	W	W	D
CO57	W	W	Y	Y	Y1
CO58	W	W	Y	Y	Y1
CO60	W	W	Y	Y	Y1
NI59	D	W	W	W	D
NI63	D	W	W	W	D
NI65	D	W	W	W	D
CU64	D	W	Y	D	Y
ZN65	Y	Y	Y	Y	Y
ZN69	Y	Y	Y	Y	Y
ZN69M	Y	Y	Y	Y	Y
GA72	D	W	W	W	W
AS76	W	W	W	W	W
SE75	D	W	W	W	W
SE79	D	W	W	W	W

Nuclide	D	W	Y	PNL	MAX
BR82	D	W	W	D	W
BR83	D	W	W	D	W
BR84	D	W	W	D	D
KR83M	D	D	D	D	D
KR85	D	D	D	D	D
KR85M	D	D	D	D	D
KR87	D	D	D	D	D
KR88	D	D	D	D	D
KR89	D	D	D	D	D
KR90	D	D	D	D	D
RB86	D	D	D	D	D
RB87	D	D	D	D	D
RB88	D	D	D	D	D
RB89	D	D	D	D	D
RB90M	D	D	D	D	D
RB90	D	D	D	D	D
SR85	D	D	Y	D	D
SR87M	D	D	Y	D	D
SR89	D	D	Y	D	D
SR90	D	D	Y	D	D
SR91	D	D	Y	D	D
SR92	D	D	Y	D	D
Y 90	W	W	Y	Y	Y
Y 91M	W	W	Y	Y	Y
Y 91	W	W	Y	Y	Y
Y 92	W	W	Y	Y	Y
Y 93	W	W	Y	Y	Y
ZR93	D	W	Y	W	D
ZR95	D	W	Y	W	D
ZR97	D	W	Y	W	Y
NB93M	W	W	Y	Y	Y
NB94	W	W	Y	Y	Y
NB95	W	W	Y	Y	Y
NB95M	W	W	Y	Y	Y
NB97	W	W	Y	Y	Y
NB97M	W	W	Y	Y	Y
MO93	D	D	Y	D	Y2
MO99	D	D	Y	D	Y

Solubility Classes, continued

Nuclide	D	W	Y	PNL	MAX
TC99	D	W	W	W	W
TC99M	D	W	W	W	D
TC101	D	W	W	W	D
RU103	D	W	Y	Y	Y
RU105	D	W	Y	Y	Y
RU106	D	W	Y	Y	Y
RH103M	D	W	Y	Y	Y
RH105	D	W	Y	Y	Y
PD103	D	W	Y	Y	Y
PD107	D	W	Y	Y	Y
PD109	D	W	Y	Y	Y
AG110M	D	W	Y	D	Y
AG111	D	W	Y	D	Y
CD109	D	W	Y	D	D
CD113M	D	W	Y	D	D
CD115	D	W	Y	D	W
CD115M	D	W	Y	D	D
IN111	D	W	W	D	W
IN113M	D	W	W	D	D
IN114M	D	W	W	D	D
IN115M	D	W	W	D	D
SN113	D	W	W	W	W
SN117M	D	W	W	W	W
SN119M	D	W	W	W	W
SN121	D	W	W	W	W
SN121M	D	W	W	W	W
SN123	D	W	W	W	W
SN125	D	W	W	W	W
SN126	D	W	W	W	W
SB122	D	W	W	W	W
SB124	D	W	W	W	W
SB125	D	W	W	W	W
SB126	D	W	W	W	W
SB126M	D	W	W	W	W
SB127	D	W	W	W	W
SB129	D	W	W	W	W
TE123M	D	W	W	W	D
TE125M	D	W	W	W	W
TE127M	D	W	W	W	W
TE127	D	W	W	W	W
TE129	D	W	W	W	W
TE129M	D	W	W	W	W
TE131M	D	W	W	W	W
TE131	D	W	W	W	W
TE132	D	W	W	W	W
TE133	D	W	W	W	W
TE133M	D	W	W	W	W
TE134	D	W	W	W	W

Nuclide	D	W	Y	PNL	MAX
I 125	D	D	D	D	D
I 129	D	D	D	D	D
I 130	D	D	D	D	D
I 131	D	D	D	D	D
I 132	D	D	D	D	D
I 133	D	D	D	D	D
I 134	D	D	D	D	D
I 135	D	D	D	D	D
XE122	D	D	D	D	D
XE125	D	D	D	D	D
XE131M	D	D	D	D	D
XE133	D	D	D	D	D
XE133M	D	D	D	D	D
XE135	D	D	D	D	D
XE135M	D	D	D	D	D
XE137	D	D	D	D	D
XE138	D	D	D	D	D
CS134	D	D	D	D	D
CS134M	D	D	D	D	D
CS135	D	D	D	D	D
CS136	D	D	D	D	D
CS137	D	D	D	D	D
CS138	D	D	D	D	D
CS139	D	D	D	D	D
BA139	D	D	D	D	D
BA140	D	D	D	D	D
BA141	D	D	D	D	D
BA142	D	D	D	D	D
LA140	D	W	W	D	W
LA141	D	W	W	D	D
LA142	D	W	W	D	D
CE141	W	W	Y	Y	Y
CE143	W	W	Y	Y	Y
CE144	W	W	Y	Y	Y
PR142	W	W	Y	Y	Y
PR143	W	W	Y	Y	Y
PR144	W	W	Y	Y	Y
PR144M	W	W	Y	Y	Y
ND147	W	W	Y	Y	Y
PM147	W	W	Y	Y	Y
PM148	W	W	Y	Y	Y
PM148M	W	W	Y	Y	Y
PM149	W	W	Y	Y	Y
PM151	W	W	Y	Y	Y
SM147	W	W	W	W	W
SM151	W	W	W	W	W
SM153	W	W	W	W	W

Solubility Classes, continued

Nuclide	D	W	Y	PNL	MAX
EU152	W	W	W	W	W
EU152M	W	W	W	W	W
EU154	W	W	W	W	W
EU155	W	W	W	W	W
EU156	W	W	W	W	W
GD153	D	W	W	D	D
GD159	D	W	W	D	W
TB160	W	W	W	W	W
TB161	W	W	W	W	W
DY165	W	W	W	W	W
HO166	W	W	W	W	W
HO166M	W	W	W	W	W
ER169	W	W	W	W	W
ER171	W	W	W	W	W
TA182	W	W	Y	Y	Y
W 181	D	D	D	D	D
W 185	D	D	D	D	D
W 187	D	D	D	D	D
RE187	D	W	W	W	W
OS185	D	W	Y	D	D
OS191	D	W	Y	D	Y
IR192	D	W	Y	Y	Y
HG203	D	D	D	D	D
PB210	D	D	D	D	D
PB212	D	D	D	D	D
BI210	D	W	W	W	W
BI212	D	W	W	W	D
PO210	D	W	W	W	D
RN222	D	D	D	D	D
FR223	D	D	D	D	D
RA223	W	W	W	W	W
RA224	W	W	W	W	W
RA225	W	W	W	W	W
RA226	W	W	W	W	W
RA228	W	W	W	W	W
AC225	D	W	Y	Y	D
AC227	D	W	Y	Y	D
AC228	D	W	Y	Y	D
TH227	W	W	Y	Y	Y
TH228	W	W	Y	Y	W

Nuclide	D	W	Y	PNL	MAX
TH229	W	W	Y	Y	W
TH230	W	W	Y	Y	W
TH231	W	W	Y	Y	Y
TH232	W	W	Y	Y	W
TH234	W	W	Y	Y	Y
PA231	W	W	Y	Y	W
PA233	W	W	Y	Y	Y
PA234	W	W	Y	Y	Y
U 232	D	W	Y	Y	Y2
U 233	D	W	Y	Y	Y2
U 234	D	W	Y	Y	Y2
U 235	D	W	Y	Y	Y2
U 236	D	W	Y	Y	Y2
U 237	D	W	Y	Y	Y
U 238	D	W	Y	Y	Y2
U 240	D	W	Y	Y	Y
NP237	W	W	W	W	W
NP238	W	W	W	W	W
NP239	W	W	W	W	W
PU236	W	W	Y	Y	W
PU237	W	W	Y	Y	Y
PU238	W	W	Y	Y	W
PU239	W	W	Y	Y	W
PU240	W	W	Y	Y	W
PU241	W	W	Y	Y	W
PU242	W	W	Y	Y	W
PU243	W	W	Y	Y	W
PU244	W	W	Y	Y	W
AM241	W	W	W	W	W
AM242	W	W	W	W	W
AM242M	W	W	W	W	W
AM243	W	W	W	W	W
CM242	W	W	W	W	W
CM243	W	W	W	W	W
CM244	W	W	W	W	W
CM245	W	W	W	W	W
CM246	W	W	W	W	W
CM247	W	W	W	W	W
CM248	W	W	W	W	W
CF252	W	W	Y	W	W

1 The MAX library uses f1 = 0.3 for all cobalt ingestion dose increments.

2 The MAX library uses the f1 for class D rather than class Y for the ingestion dose increments for Mo-93, U-232, U-233, U-234, U-235, U-236, and U-238.

Attachment 2: Input Files for INTDF

First Group of Nuclides:

```
70        'No. of years to consider
T         'Acute? if false then chronic
1.0       'Particle size, micron
F         'Print SEE's and Debug print statements?
5.0-7     'Relative error tolerance (LSODES2)
5.0-9     'Absolute error tolerance (LSODES2)
365.0     'Absolute step size allowed (LSODES2)
1.0-6     'Initial step size (LSODES2)
750       'Number of steps to reach convergence allowed (LSODES2)
F         10.0        'Fetal dose, age (da)
```

H 3					
BE7	SC46	ZN69M	SR87M	NB95	PD107
BE10	CR51	GA72	SR89	NB95M	PD109
C 14	MN54	AS76	SR90	NB97	AG110M
N 13	MN56	SE75	SR91	NB97M	AG111
F 18	FE55	SE79	SR92	MO93	CD109
NA22	FE59	BR82	Y 90	MO99	CD113M
NA24	CO57	BR83	Y 91	TC99	CD115
SI31	CO58	BR84	Y 91M	TC99M	CD115M
P 32	CO60	RB86	Y 92	TC101	IN111
P 33	NI59	RB87	Y 93	RU103	IN113M
S 35	NI63	RB88	ZR93	RU105	IN114M
CL36	NI65	RB89	ZR95	RU106	IN115M
K 40	CU64	RB90	ZR97	RH103M	
CA41	ZN65	RB90M	NB93M	RH105	
CA45	ZN69	SR85	NB94	PD103	

Second Group of Nuclides:

SN113	TE123M	I 131	BA142	PM149	HO166
SN117M	TE125M	I 132	LA140	PM151	HO166M
SN119M	TE127	I 133	LA141	SM147	ER169
SN121	TE127M	I 134	LA142	SM151	ER171
SN121M	TE129	I 135	CE141	SM153	TA182
SN123	TE129M	CS134	CE143	EU152	W 181
SN125	TE131	CS134M	CE144	EU152M	W 185
SN126	TE131M	CS135	PR142	EU154	W 187
SB122	TE132	CS136	PR143	EU155	RE187
SB124	TE133	CS137	PR144	EU156	OS185
SB125	TE133M	CS138	PR144M	GD153	OS191
SB126	TE134	CS139	ND147	GD159	IR192
SB126M	I 125	BA139	PM147	TB160	HG203
SB127	I 129	BA140	PM148	TB161	
SB129	I 130	BA141	PM148M	DY165	

Third Group of Nuclides:

```
70        'No. of years to consider
T         'Acute? if false then chronic
1.0       'Particle size, micron
F         'Print SEE's and Debug print statements?
5.0-7     'Relative error tolerance (LSODES2)
5.0-9     'Absolute error tolerance (LSODES2)
365.0     'Absolute step size allowed (LSODES2)
1.0-6     'Initial step size (LSODES2)
750       'Number of steps to reach convergence allowed (LSODES2)
F         10.0        'Fetal dose, age (da)
    PB210
    PB212
    BI210
    BI212
    PO210
    RN222
    FR223
    RA223
    RA224
    RA225
    RA226
    RA228
    AC225
    AC227
    AC228
    TH227
    TH228
    TH229
    TH230
    TH231
    TH232
    TH234
    PA231
    PA233
    PA234
    U 233
    U 234
    U 235
    U 236
    U 237
    U 238
    U 240
    NP237
    NP238
    NP239
    PU237
    PU238
    PU239
    PU240
    PU241
    PU242
    PU243
    PU244
    AM241
    AM242
    AM242M
    AM243
    CM242
    CM243
    CM244
    CM245
    CM246
    CM247
    CM248
    CF252
```

Attachment 3: Listing of the Commands in CLASS.BAT

Note: The ^ character in the listing represents ESC (ASCII 27) for use in controlling screen colors with the ANSI.SYS device driver.

```
@ECHO OFF
: Author:  Paul Rittmann
: This is a self explaining batch file.  Type "CLASS" for
:    instructions on how to use this.

IF ZIP%1==ZIP  GOTO  SHOW-HOW
IF %1==MAX  GOTO COPY-IT
IF %1==max  GOTO COPY-IT
IF %1==PNL  GOTO COPY-IT
IF %1==pnl  GOTO COPY-IT
IF %1==D  GOTO COPY-IT
IF %1==d  GOTO COPY-IT
IF %1==W  GOTO COPY-IT
IF %1==w  GOTO COPY-IT
IF %1==Y  GOTO COPY-IT
IF %1==y  GOTO COPY-IT
IF %1==OLD  GOTO COPY-IT
IF %1==old  GOTO COPY-IT
:SHOW-HOW
ECHO ^[1;37m
ECHO  ++++++++++++++++++  Instructions for CLASS.BAT  ++++++++++++++++++
ECHO ^[32m
ECHO      Purpose: ^[36m Install alternate Dose Factor libraries for GENII.
ECHO ^[32m
ECHO      First Parameter: ^[36m  Identifies which library to use.
ECHO           ^[33m  D, W, Y ^[36m =  Lung Clearance Time (days, weeks, years)
ECHO           ^[33m      MAX ^[36m =  Worst Case Solubility Assignments
ECHO           ^[33m      PNL ^[36m =  PNL Solubility Assignments
ECHO           ^[33m      OLD ^[36m =  Original Dose Factor Library (8/29/88)
ECHO ^[32m
ECHO      Example: ^[36m For a UNH release (Class D), type ^[33m CLASS D
ECHO ^[36m               before starting the GENII run.
ECHO ^[32m
ECHO      Note: ^[36m  Different solubility classes may give different doses
ECHO              for both inhalation and ingestion.
ECHO ^[37m
ECHO  ++++++++++++++++++++++++++++++++++++++++++++++++++++++++++++++++++++
GOTO END

:COPY-IT
ECHO  ^[1;35m
COPY CLASS-%1.BIN DOSINC.DAT
COPY CLASS-%1.TXT DOSINC.OUT
COPY DITTY-%1.DSF DSFCT30.DAT
ECHO  ^[36m
ECHO The following library will be used in the next GENII run:
ECHO  ^[32m
TYPE DOSINC.OUT

:END
ECHO
```

SECTION 3

Verification Tests for the July 1993 Revision to the GENII Radionuclide and Dose Increment Libraries

by Paul D. Rittmann, PhD CHP October 12, 1993

One of the data files used by GENII (Napier 1988) was modified to improve the treatment of decay chains. The principle reason for this was the discovery of errors when doing long decay times for calculations of doses from contaminated soil which has been allowed to decay for hundreds of years. Air transport calculations for Safety Analysis Reports (and similar endeavors) are largely unaffected by these changes due to the short decay times involved. To decrease execution times for air transport calculations, a second version of RMDLIB was created with shorter decay chains.

This report summarizes the changes which were made, and the impact those changes will have on typical calculations. To be complete, every nuclide in the GENII library was tested.

1.0 CHANGES TO RMDLIB.DAT

The data file named RMDLIB.DAT was completely overhauled. A summary of the changes is given below. The old and new versions of RMDLIB.DAT are shown on the next page. The extra columns of data to the right of the inhalation class for the lung model are not shown because they did not change.

(1) Changed the order of the parent nuclide indices for Rb-87, Rb-90, Sr-90, Rh-103m, Te-129, and Ra-223. This was done to compensate for a limitation in the decay chain subroutine of GENII. In the original order, daughter nuclides were sometimes skipped. For example, both Pd-103 and Ru-103 decay to Rh-103m. In the original file, the Rh-103m decay is not calculated for Pd-103, although it is for Ru-103. In the revised arrangement, both are calculated correctly.

(2) Corrected the halflife of Xe-122 (was 8.38E-2 days; is now 0.8375 days). Halflives which changed more than 1 percent are listed below.

Nuclide	Percent Difference
Ca-41	2.5
Sn-117m	-2.9
Pa-231	-12.0
U -232	11.4
U -233	4.2
U -234	7.7
Pu-243	7.6

(3) Lengthened three decay chains to improve accuracy at long decay times: (a) Cf-252 & Cm-248 were added to the Cm-244 chain, (b) Cm-246 & U-234 were added to the Am-242m chain, and (c) the Cm-245 and U-237 chains were merged

(4) Rewrote all the halflives to restore significant digits to improve agreement between GENII and hand calculations. RMDLIB.DAT shows halflives in units of days. Halflives which have units of years were converted to days using the factor 365.25 days per year.

(5) Restored the PNL default solubility class assumptions. This is not a relevant change since this parameter is only read by INTDF when it calculates internal dose factors.

The changes to RMDLIB.DAT were automated using a computer program to read halflife values from the data file ENERGY.DAT and use them to replace the values in RMDLIB.DAT. ENERGY.DAT is normally only used by the EXTDF program when generating external dose factors. The halflives in ENERGY.DAT are the same as those in Kocher, 1981.

Old and New Versions of RMDLIB.DAT Side-by-Side
(order changes are marked)

Radionuclide Master Library (11/15/90 PDR)

H 3	4.49E+3	1	0	0.0000	0	0.0000	1			ND
BE7	5.33E+1	1	0	0.0000	0	0.0000	4			VY
BE10	5.84E+8	1	0	0.0000	0	0.0000	4			VY
C 14	2.09E+6	1	0	0.0000	0	0.0000	6			ND
N 13	6.92E-3	1	0	0.0000	0	0.0000	7			ND
F 18	7.62E-2	1	0	0.0000	0	0.0000	9			SD
NA22	9.50E+2	1	0	0.0000	0	0.0000	11			VD
NA24	6.25E-1	1	0	0.0000	0	0.0000	11			VD
SI31	1.09E-1	1	0	0.0000	0	0.0000	14			NY
P 32	1.43E+1	1	0	0.0000	0	0.0000	15			SW
P 33	2.54E+1	1	0	0.0000	0	0.0000	15			VW
S 35	8.74E+1	1	0	0.0000	0	0.0000	16			NW
CL36	1.10E+8	1	0	0.0000	0	0.0000	17			NW
AR39	9.83E+4	1	0	0.0000	0	0.0000	18			ND
K 40	4.67E11	1	0	0.0000	0	0.0000	19			ND
AR41	7.61E-2	1	0	0.0000	0	0.0000	18			ND
CA41	3.67E+7	1	0	0.0000	0	0.0000	20		1	VW
CA45	1.63E+2	1	0	0.0000	0	0.0000	20		1	VW
SC46	8.38E+1	1	0	0.0000	0	0.0000	21			VY
CR51	2.77E+1	1	0	0.0000	0	0.0000	24			VY
MN54	3.13E+2	1	0	0.0000	0	0.0000	25			SW
FE55	9.86E+2	1	0	0.0000	0	0.0000	26			ND
MN56	1.07E-1	1	0	0.0000	0	0.0000	25			SD
CO57	2.71E+2	1	0	0.0000	0	0.0000	27			NY
CO58	7.08E+1	1	0	0.0000	0	0.0000	27			NY
FE59	4.46E+1	1	0	0.0000	0	0.0000	26			ND
NI59	2.74E+7	1	0	0.0000	0	0.0000	28			ND
CO60	1.92E+3	1	0	0.0000	0	0.0000	27	T		NY
NI63	3.65E+4	1	0	0.0000	0	0.0000	28			ND
CU64	5.29E-1	1	0	0.0000	0	0.0000	29			NY
NI65	1.05E-1	1	0	0.0000	0	0.0000	28			ND
ZN65	2.44E+2	1	0	0.0000	0	0.0000	30	T		VY
ZN69M	5.73E-1	1	0	0.0000	0	0.0000	30			SY
ZN69	3.86E-2	2	1	1.0000	0	0.0000	30			SY
GA72	5.87E-1	1	0	0.0000	0	0.0000	31			SW
SE75	1.20E+2	1	0	0.0000	0	0.0000	34			NW
AS76	1.10E+0	1	0	0.0000	0	0.0000	33			NW
SE79	2.37E+7	1	0	0.0000	0	0.0000	34			NW
BR82	1.47E+0	1	0	0.0000	0	0.0000	35			NW
BR83	9.96E-2	1	0	0.0000	0	0.0000	35			NW
KR83M	7.63E-2	2	1	1.0000	0	0.0000	36			ND
BR84	2.21E-2	1	0	0.0000	0	0.0000	35			ND
KR85M	1.87E-1	1	0	0.0000	0	0.0000	36			ND
KR85	3.91E+3	2	1	0.2110	0	0.0000	36			ND
SR85	6.48E+1	1	0	0.0000	0	0.0000	38		1	VD
RB86	1.87E+1	1	0	0.0000	0	0.0000	37			VD
KR87	5.30E-2	1	0	0.0000	0	0.0000	36			ND
SR87M	1.17E-1	2	0	0.0000	0	0.0000	38		1	SD
RB87	1.73E13	3	1	1.0000	2	0.0030	37			VD
KR88	1.18E-1	1	0	0.0000	0	0.0000	36			ND
RB88	1.24E-2	2	1	1.0000	0	0.0000	37			VD

Radionuclide Master Library, Long Times (23-July-93 PDR

H 3	4485.27	1	0	0.0000	0	0.0000	1			ND
BE7	53.44	1	0	0.0000	0	0.0000	4			VY
BE10	5.844E8	1	0	0.0000	0	0.0000	4			VY
C 14	2.093E6	1	0	0.0000	0	0.0000	6			ND
N 13	6.924-3	1	0	0.0000	0	0.0000	7			ND
F 18	0.07621	1	0	0.0000	0	0.0000	9			SD
NA22	950.38	1	0	0.0000	0	0.0000	11			VD
NA24	0.625	1	0	0.0000	0	0.0000	11			VD
SI31	0.10924	1	0	0.0000	0	0.0000	14			NW
P 32	14.29	1	0	0.0000	0	0.0000	15			SD
P 33	25.4	1	0	0.0000	0	0.0000	15			VD
S 35	87.44	1	0	0.0000	0	0.0000	16			NW
CL36	1.099E8	1	0	0.0000	0	0.0000	17			ND
AR39	98252.3	1	0	0.0000	0	0.0000	18			ND
K 40	466.4E9	1	0	0.0000	0	0.0000	19			ND
AR41	0.07612	1	0	0.0000	0	0.0000	18			ND
CA41	3.762E7	1	0	0.0000	0	0.0000	20		1	VW
CA45	162.7	1	0	0.0000	0	0.0000	20		1	VW
SC46	83.8	1	0	0.0000	0	0.0000	21			VY
CR51	27.704	1	0	0.0000	0	0.0000	24			VY
MN54	312.7	1	0	0.0000	0	0.0000	25			SW
FE55	986.175	1	0	0.0000	0	0.0000	26			NW
MN56	0.10744	1	0	0.0000	0	0.0000	25			SW
CO57	270.9	1	0	0.0000	0	0.0000	27			NY
CO58	70.8	1	0	0.0000	0	0.0000	27			NY
FE59	44.63	1	0	0.0000	0	0.0000	26			NW
NI59	2.739E7	1	0	0.0000	0	0.0000	28			NW
CO60	1925.23	1	0	0.0000	0	0.0000	27	T		NY
NI63	36561.5	1	0	0.0000	0	0.0000	28			NW
CU64	0.52921	1	0	0.0000	0	0.0000	29			ND
NI65	0.105	1	0	0.0000	0	0.0000	28			NW
ZN65	244.4	1	0	0.0000	0	0.0000	30	T		VY
ZN69M	0.57333	1	0	0.0000	0	0.0000	30			SY
ZN69	0.03861	2	1	1.0000	0	0.0000	30			SY
GA72	0.5875	1	0	0.0000	0	0.0000	31			SW
SE75	119.78	1	0	0.0000	0	0.0000	34			NW
AS76	1.09667	1	0	0.0000	0	0.0000	33			NW
SE79	2.374E7	1	0	0.0000	0	0.0000	34			NW
BR82	1.47083	1	0	0.0000	0	0.0000	35			ND
BR83	0.09958	1	0	0.0000	0	0.0000	35			ND
KR83M	0.07625	2	1	1.0000	0	0.0000	36			ND
BR84	0.02208	1	0	0.0000	0	0.0000	35			ND
KR85M	0.18667	1	0	0.0000	0	0.0000	36			ND
KR85	3915.48	2	1	0.2110	0	0.0000	36			ND
SR85	64.84	1	0	0.0000	0	0.0000	38		1	VD
RB86	18.66	1	0	0.0000	0	0.0000	37			VD
KR87	0.05299	1	0	0.0000	0	0.0000	36			ND
SR87M	0.11688	2	0	0.0000	0	0.0000	38		1	SD
RB87	1.73E13	3	2	0.0030	1	1.0000	37			VD
KR88	0.11833	1	0	0.0000	0	0.0000	36			ND
RB88	0.01236	2	1	1.0000	0	0.0000	37			VD

KR89	2.20E-3	1	0	0.0000	0	0.0000	36				ND
RB89	1.07E-2	2	1	1.0000	0	0.0000	37				VD
SR89	5.06E+1	3	2	1.0000	0	0.0000	38		1		VD
KR90	3.74E-4	1	0	0.0000	0	0.0000	36				ND
RB90M	2.99E-3	2	1	0.1190	0	0.0000	37				VD
RB90	1.82E-3	3	1	0.8810	2	0.0230	37				VD
SR90	1.04E+4	4	2	0.9770	3	1.0000	38	T	1		VD
Y 90	2.67E+0	5	4	1.0000	0	0.0000	39	T			SY
SR91	3.96E-1	1	0	0.0000	0	0.0000	38		1		SD
Y 91M	3.45E-2	2	1	0.5740	0	0.0000	39				SY
Y 91	5.85E+1	3	2	1.0000	1	0.4260	39				SY
SR92	1.13E-1	1	0	0.0000	0	0.0000	38		1		SD
Y 92	1.48E-1	2	1	1.0000	0	0.0000	39				SY
Y 93	4.21E-1	1	0	0.0000	0	0.0000	39				SY
MO93	1.28E+6	2	0	0.0000	0	0.0000	42				SY
ZR93	5.58E+8	3	1	1.0000	0	0.0000	40				SD
NB93M	5.33E+3	4	3	1.0000	2	1.0000	41				VY
NB94	7.41E+6	1	0	0.0000	0	0.0000	41				VY
ZR95	6.40E+1	1	0	0.0000	0	0.0000	40				SD
NB95M	3.61E+0	2	1	0.0080	0	0.0000	41				SY
NB95	3.51E+1	3	2	0.9450	1	0.9922	41				SY
ZR97	7.04E-1	1	0	0.0000	0	0.0000	40				SY
NB97M	6.94E-4	2	1	0.9470	0	0.0000	41				SY
NB97	5.01E-2	3	2	1.0000	1	0.0530	41				SY
MO99	2.75E+0	1	0	0.0000	0	0.0000	42				SY
TC99M	2.51E-1	2	1	0.8860	0	0.0000	43				ND
TC99	7.77E+7	3	2	1.0000	1	0.1140	43	T			NW
TC101	9.86E-3	1	0	0.0000	0	0.0000	43				ND
RU103	3.94E+1	1	0	0.0000	0	0.0000	44				NY
PD103	1.70E+1	2	0	0.0000	0	0.0000	46				VY
RH103M	3.90E-2	3	1	0.9974	2	0.9997	45				NY
RU105	1.85E-1	1	0	0.0000	0	0.0000	44				NY
RH105	1.47E+0	2	1	1.0000	0	0.0000	45				NY
RU106	3.68E+2	1	0	0.0000	0	0.0000	44	T			NY
PD107	2.37E+9	1	0	0.0000	0	0.0000	46				VY
PD109	5.61E-1	1	0	0.0000	0	0.0000	46				SY
CD109	4.64E+2	1	0	0.0000	0	0.0000	48				ND
AG110M	2.50E+2	1	0	0.0000	0	0.0000	47				NY
AG111	7.46E+0	1	0	0.0000	0	0.0000	47				NY
IN111	2.83E+0	1	0	0.0000	0	0.0000	49				VW
SN113	1.15E+2	1	0	0.0000	0	0.0000	50				VW
IN113M	6.91E-2	2	1	1.0000	0	0.0000	49				VD
CD113M	5.00E+3	1	0	0.0000	0	0.0000	48				ND
CD115M	4.46E+1	1	0	0.0000	0	0.0000	48				ND
CD115	2.23E+0	1	0	0.0000	0	0.0000	48				NW
IN115M	1.82E-1	2	1	1.0000	0	0.0000	49				VD
IN114M	5.00E+1	1	0	0.0000	0	0.0000	49				VD
SN117M	1.40E+1	1	0	0.0000	0	0.0000	50				SW
SN119M	2.93E+2	1	0	0.0000	0	0.0000	50				VW
SN121M	2.01E+4	1	0	0.0000	0	0.0000	50				VW
SN121	1.13E+0	2	1	0.776	0	0.0000	50				SW
SB122	2.70E+0	1	0	0.0000	0	0.0000	51				SW
XE122	8.38E-2	1	0	0.0000	0	0.0000	54				ND
SN123	1.29E+2	1	0	0.0000	0	0.0000	50				VW
TE123M	1.20E+2	1	0	0.0000	0	0.0000	52				SD
SB124	6.02E+1	1	0	0.0000	0	0.0000	51				SW
SN125	9.64E+0	1	0	0.0000	0	0.0000	50				SW
SB125	1.01E+3	2	1	1.0000	0	0.0000	51				SW
TE125M	5.80E+1	3	2	0.2310	0	0.0000	52				SW
XE125	7.00E-1	1	0	0.0000	0	0.0000	54				ND
I 125	6.01E+1	2	1	1.0000	0	0.0000	53		2		ND
SN126	3.65E+7	1	0	0.0000	0	0.0000	50				VW
SB126M	1.32E-2	2	1	1.0000	0	0.0000	51				SW
SB126	1.24E+1	3	2	0.1400	0	0.0000	51				SW
SB127	3.85E+0	1	0	0.0000	0	0.0000	51				SW
TE127M	1.09E+2	2	1	0.1690	0	0.0000	52				SW
TE127	3.90E-1	3	2	0.9820	1	0.8310	52				SW
SB129	1.83E-1	1	0	0.0000	0	0.0000	51				SW
TE129M	3.36E+1	2	1	0.1660	0	0.0000	52				SW
TE129	4.83E-2	3	1	0.8340	2	0.6290	52				SW
I 129	5.73E+9	4	3	1.0000	2	0.3710	53	T	2		ND
I 130	5.15E-1	1	0	0.0000	0	0.0000	53		2		ND
TE131M	1.25E+0	1	0	0.0000	0	0.0000	52				SW
TE131	1.74E-2	2	1	0.2220	0	0.0000	52	T			SW
I 131	8.04E+0	3	2	1.0000	1	0.7780	53	T	2		ND
XE131M	1.18E+1	4	3	0.0109	0	0.0000	54				ND
TE132	3.26E+0	1	0	0.0000	0	0.0000	52				SW
I 132	9.58E-2	2	1	1.0000	0	0.0000	53		2		ND

KR89	2.194-3	1	0	0.0000	0	0.0000	36				ND
RB89	0.01072	2	1	1.0000	0	0.0000	37				VD
SR89	50.55	3	2	1.0000	0	0.0000	38		1		VD
KR90	3.741-4	1	0	0.0000	0	0.0000	36				ND
RB90M	2.986-3	2	1	0.1190	0	0.0000	37				VD
RB90	1.817-3	3	2	0.0230	1	0.8810	37				VD
SR90	10446.1	4	3	1.0000	2	0.9770	38	T	1		VD
Y 90	2.67083	5	4	1.0000	0	0.0000	39	T			SY
SR91	0.39583	1	0	0.0000	0	0.0000	38		1		SD
Y 91M	0.03452	2	1	0.5740	0	0.0000	39				SY
Y 91	58.51	3	2	1.0000	1	0.4260	39				SY
SR92	0.11292	1	0	0.0000	0	0.0000	38		1		SD
Y 92	0.1475	2	1	1.0000	0	0.0000	39				SY
Y 93	0.42083	1	0	0.0000	0	0.0000	39				SY
MO93	1.278E6	2	0	0.0000	0	0.0000	42				SD
ZR93	5.588E8	3	1	1.0000	0	0.0000	40				SW
NB93M	5332.65	4	3	1.0000	2	1.0000	41				VY
NB94	7.415E6	1	0	0.0000	0	0.0000	41				VY
ZR95	64.02	1	0	0.0000	0	0.0000	40				SW
NB95M	3.60833	2	1	0.0078	0	0.0000	41				SY
NB95	35.06	3	2	0.9450	1	0.9922	41				SY
ZR97	0.70417	1	0	0.0000	0	0.0000	40				SW
NB97M	6.944-4	2	1	0.9470	0	0.0000	41				SY
NB97	0.05007	3	2	1.0000	1	0.0530	41				SY
MO99	2.75083	1	0	0.0000	0	0.0000	42				SD
TC99M	0.25083	2	1	0.8860	0	0.0000	43				NW
TC99	7.780E7	3	2	1.0000	1	0.1140	43	T			NW
TC101	9.861-3	1	0	0.0000	0	0.0000	43				NW
PD103	16.961	1	0	0.0000	0	0.0000	46				VY
RU103	39.35	2	0	0.0000	0	0.0000	44				NY
RH103M	0.03897	3	2	0.9974	1	0.9997	45				NY
RU105	0.185	1	0	0.0000	0	0.0000	44				NY
RH105	1.47333	2	1	1.0000	0	0.0000	45				NY
RU106	368.2	1	0	0.0000	0	0.0000	44	T			NY
PD107	2.374E9	1	0	0.0000	0	0.0000	46				VY
PD109	0.56054	1	0	0.0000	0	0.0000	46				SY
CD109	464.0	1	0	0.0000	0	0.0000	48				ND
AG110M	249.85	1	0	0.0000	0	0.0000	47				ND
AG111	7.46	1	0	0.0000	0	0.0000	47				ND
IN111	2.83	1	0	0.0000	0	0.0000	49				VD
SN113	115.1	1	0	0.0000	0	0.0000	50				VW
IN113M	0.06908	2	1	1.0000	0	0.0000	49				VD
CD113M	5003.93	1	0	0.0000	0	0.0000	48				ND
CD115M	44.6	1	0	0.0000	0	0.0000	48				ND
CD115	2.2275	1	0	0.0000	0	0.0000	48				ND
IN115M	0.18167	2	1	1.0000	0	0.0000	49				VD
IN114M	49.51	1	0	0.0000	0	0.0000	49				VD
SN117M	13.6	1	0	0.0000	0	0.0000	50				SW
SN119M	293.0	1	0	0.0000	0	0.0000	50				VW
SN121M	20088.8	1	0	0.0000	0	0.0000	50				VW
SN121	1.128	2	1	0.776	0	0.0000	50				SW
SB122	2.7	1	0	0.0000	0	0.0000	51				SW
XE122	0.8375	1	0	0.0000	0	0.0000	54				ND
SN123	129.2	1	0	0.0000	0	0.0000	50				VW
TE123M	119.7	1	0	0.0000	0	0.0000	52				SW
SB124	60.2	1	0	0.0000	0	0.0000	51				SW
SN125	9.64	1	0	0.0000	0	0.0000	50				SW
SB125	1011.74	2	1	1.0000	0	0.0000	51				SW
TE125M	58.0	3	2	0.2310	0	0.0000	52				SW
XE125	0.7	1	0	0.0000	0	0.0000	54				ND
I 125	60.14	2	1	1.0000	0	0.0000	53		2		ND
SN126	3.653E7	1	0	0.0000	0	0.0000	50				VW
SB126M	0.01319	2	1	1.0000	0	0.0000	51				SW
SB126	12.4	3	2	0.1400	0	0.0000	51				SW
SB127	3.85	1	0	0.0000	0	0.0000	51				SW
TE127M	109.0	2	1	0.1690	0	0.0000	52				SW
TE127	0.38958	3	2	0.9817	1	0.8310	52				SW
SB129	0.18333	1	0	0.0000	0	0.0000	51				SW
TE129M	33.6	2	1	0.1660	0	0.0000	52				SW
TE129	0.04833	3	2	0.6290	1	0.8340	52				SW
I 129	5.734E9	4	3	1.0000	2	0.3710	53	T	2		ND
I 130	0.515	1	0	0.0000	0	0.0000	53		2		ND
TE131M	1.25	1	0	0.0000	0	0.0000	52				SW
TE131	0.01736	2	1	0.2220	0	0.0000	52	T			SW
I 131	8.04	3	2	1.0000	1	0.7780	53	T	2		ND
XE131M	11.84	4	3	0.0109	0	0.0000	54				ND
TE132	3.25833	1	0	0.0000	0	0.0000	52				SW
I 132	0.09583	2	1	1.0000	0	0.0000	53		2		ND

TE133M	3.85E-2	1	0	0.0000	0	0.0000	52			SW
TE133	8.65E-3	2	1	0.1300	0	0.0000	52			SW
I 133	8.67E-1	3	2	1.0000	1	0.8700	53		2	ND
XE133M	2.19E+0	4	3	0.0288	0	0.0000	54			ND
XE133	5.25E+0	5	4	1.0000	3	0.9712	54			ND
TE134	2.90E-2	1	0	0.0000	0	0.0000	52			SW
I 134	3.65E-2	2	1	1.0000	0	0.0000	53		2	ND
CS134M	1.21E-1	1	0	0.0000	0	0.0000	55			ND
CS134	7.53E+2	2	1	1.0000	0	0.0000	55			ND
I 135	2.75E-1	1	0	0.0000	0	0.0000	53		2	ND
XE135M	1.07E-2	2	1	0.1650	0	0.0000	54			ND
XE135	3.80E-1	3	2	1.0000	1	0.8350	54			ND
CS135	8.40E+8	4	3	1.0000	0	0.0000	55			ND
CS136	1.32E+1	1	0	0.0000	0	0.0000	55			ND
XE137	2.66E-3	1	0	0.0000	0	0.0000	54			ND
CS137	1.10E+4	2	1	1.0000	0	0.0000	55	T		ND
XE138	9.81E-3	1	0	0.0000	0	0.0000	54			ND
CS138	2.24E-2	2	1	1.0000	0	0.0000	55			ND
CS139	6.53E-3	1	0	0.0000	0	0.0000	55			ND
BA139	5.77E-2	2	1	1.0000	0	0.0000	56		1	SD
BA140	1.28E+1	1	0	0.0000	0	0.0000	56	T	1	SD
LA140	1.68E+0	2	1	1.0000	0	0.0000	57	T		SW
BA141	1.27E-2	1	0	0.0000	0	0.0000	56		1	SD
LA141	1.64E-1	2	1	1.0000	0	0.0000	57			SD
CE141	3.25E+1	3	2	1.0000	0	0.0000	58			SY
BA142	7.43E-3	1	0	0.0000	0	0.0000	56		1	SD
LA142	6.63E-2	2	1	1.0000	0	0.0000	57			SD
PR142	7.97E-1	1	0	0.0000	0	0.0000	59			SY
CE143	1.38E+0	1	0	0.0000	0	0.0000	58			SY
PR143	1.36E+1	2	1	1.0000	0	0.0000	59			SY
CE144	2.84E+2	1	0	0.0000	0	0.0000	58	T		SY
PR144M	5.00E-3	2	1	0.0143	0	0.0000	59			SY
PR144	1.20E-2	3	2	1.0000	1	0.9857	59	T		SY
ND147	1.10E+1	1	0	0.0000	0	0.0000	60			SY
PM147	9.58E+2	2	1	1.0000	0	0.0000	61			SY
SM147	3.87E13	3	2	1.0000	0	0.0000	62			SW
PM148M	4.13E+1	1	0	0.0000	0	0.0000	61			SY
PM148	5.37E+0	2	1	0.0420	0	0.0000	61			SY
PM149	2.21E+0	1	0	0.0000	0	0.0000	61			SY
PM151	1.18E+0	1	0	0.0000	0	0.0000	61			SY
SM151	3.29E+4	2	1	1.0000	0	0.0000	62			SW
EU152M	3.88E-1	1	0	0.0000	0	0.0000	63			SW
EU152	4.96E+3	1	0	0.0000	0	0.0000	63			SW
SM153	1.95E+0	1	0	0.0000	0	0.0000	62			SW
GD153	2.42E+2	1	0	0.0000	0	0.0000	64			SD
EU154	3.21E+3	1	0	0.0000	0	0.0000	63			SW
EU155	1.81E+3	1	0	0.0000	0	0.0000	63			SW
EU156	1.52E+1	1	0	0.0000	0	0.0000	63			SW
GD159	7.73E-1	1	0	0.0000	0	0.0000	64			SW
TB160	7.23E+1	1	0	0.0000	0	0.0000	65			SW
TB161	6.91E+0	1	0	0.0000	0	0.0000	65			SW
DY165	9.73E-2	1	0	0.0000	0	0.0000	66			SW
HO166M	4.38E+5	1	0	0.0000	0	0.0000	67			SW
HO166	1.12E+0	1	0	0.0000	0	0.0000	67			SW
ER169	9.40E+0	1	0	0.0000	0	0.0000	68			SW
ER171	3.13E-1	1	0	0.0000	0	0.0000	68			SW
W 181	1.21E+2	1	0	0.0000	0	0.0000	74			VD
TA182	1.15E+2	1	0	0.0000	0	0.0000	73			VY
W 185	7.51E+1	1	0	0.0000	0	0.0000	74			VD
OS185	9.36E+1	1	0	0.0000	0	0.0000	76			ND
W 187	9.93E-1	1	0	0.0000	0	0.0000	74			SD
RE187	1.72E13	2	1	1.0000	0	0.0000	75			NW
OS191	1.54E+1	1	0	0.0000	0	0.0000	76			NY
IR192	7.40E+1	1	0	0.0000	0	0.0000	77			NY
HG203	4.66E+1	1	0	0.0000	0	0.0000	80			ND
CF252	9.63E+2	1	0	0.0000	0	0.0000	98			SW
CM248	1.24E+8	1	0	0.0000	0	0.0000	96			SW
CM244	6.61E+3	1	0	0.0000	0	0.0000	96			SW
PU244	3.01E10	2	0	0.0000	0	0.0000	94			SW
U 240	5.88E-1	3	2	0.9988	0	0.0000	92			SY
PU240	2.40E+6	4	3	1.0000	1	1.0000	94			SW
U 236	8.55E+9	1	0	0.0000	0	0.0000	92			VY

TE133M	0.03847	1	0	0.0000	0	0.0000	52			SW
TE133	8.646-3	2	1	0.1300	0	0.0000	52			SW
I 133	0.86667	3	2	1.0000	1	0.8700	53		2	ND
XE133M	2.19	4	3	0.0288	0	0.0000	54			ND
XE133	5.245	5	4	1.0000	3	0.9712	54			ND
TE134	0.02903	1	0	0.0000	0	0.0000	52			SW
I 134	0.03653	2	1	1.0000	0	0.0000	53		2	ND
CS134M	0.12083	1	0	0.0000	0	0.0000	55			ND
CS134	753.145	2	1	1.0000	0	0.0000	55			ND
I 135	0.27542	1	0	0.0000	0	0.0000	53		2	ND
XE135M	0.01067	2	1	0.1650	0	0.0000	54			ND
XE135	0.37958	3	2	1.0000	1	0.8350	54			ND
CS135	8.401E8	4	3	1.0000	0	0.0000	55			ND
CS136	13.16	1	0	0.0000	0	0.0000	55			ND
XE137	2.660-3	1	0	0.0000	0	0.0000	54			ND
CS137	11019.6	2	1	1.0000	0	0.0000	55	T		ND
XE138	9.813-3	1	0	0.0000	0	0.0000	54			ND
CS138	0.02236	2	1	1.0000	0	0.0000	55			ND
CS139	6.528-3	1	0	0.0000	0	0.0000	55			ND
BA139	0.05771	2	1	1.0000	0	0.0000	56		1	SD
BA140	12.789	1	0	0.0000	0	0.0000	56	T	1	SD
LA140	1.67583	2	1	1.0000	0	0.0000	57	T		SD
BA141	0.01269	1	0	0.0000	0	0.0000	56		1	SD
LA141	0.16417	2	1	1.0000	0	0.0000	57			SD
CE141	32.5	3	2	1.0000	0	0.0000	58			SY
BA142	7.431-3	1	0	0.0000	0	0.0000	56		1	SD
LA142	0.06625	2	1	1.0000	0	0.0000	57			SD
PR142	0.79708	1	0	0.0000	0	0.0000	59			SY
CE143	1.375	1	0	0.0000	0	0.0000	58			SY
PR143	13.56	2	1	1.0000	0	0.0000	59			SY
CE144	284.3	1	0	0.0000	0	0.0000	58	T		SY
PR144M	5.000-3	2	1	0.0143	0	0.0000	59			SY
PR144	0.012	3	2	0.9994	1	0.9857	59	T		SY
ND147	10.98	1	0	0.0000	0	0.0000	60			SY
PM147	958.197	2	1	1.0000	0	0.0000	61			SY
SM147	3.90E13	3	2	1.0000	0	0.0000	62			SW
PM148M	41.3	1	0	0.0000	0	0.0000	61			SY
PM148	5.37	2	1	0.0420	0	0.0000	61			SY
PM149	2.21167	1	0	0.0000	0	0.0000	61			SY
PM151	1.18333	1	0	0.0000	0	0.0000	61			SY
SM151	32872.5	2	1	1.0000	0	0.0000	62			SW
EU152M	0.38833	1	0	0.0000	0	0.0000	63			SW
EU152	4967.4	1	0	0.0000	0	0.0000	63			SW
SM153	1.94583	1	0	0.0000	0	0.0000	62			SW
GD153	241.6	1	0	0.0000	0	0.0000	64			SD
EU154	3214.2	1	0	0.0000	0	0.0000	63			SW
EU155	1811.64	1	0	0.0000	0	0.0000	63			SW
EU156	15.19	1	0	0.0000	0	0.0000	63			SW
GD159	0.77333	1	0	0.0000	0	0.0000	64			SD
TB160	72.3	1	0	0.0000	0	0.0000	65			SW
TB161	6.9	1	0	0.0000	0	0.0000	65			SW
DY165	0.09725	1	0	0.0000	0	0.0000	66			SW
HO166M	438300.	1	0	0.0000	0	0.0000	67			SW
HO166	1.11667	1	0	0.0000	0	0.0000	67			SW
ER169	9.4	1	0	0.0000	0	0.0000	68			SW
ER171	0.31333	1	0	0.0000	0	0.0000	68			SW
W 181	120.95	1	0	0.0000	0	0.0000	74			VD
TA182	114.74	1	0	0.0000	0	0.0000	73			VY
W 185	75.1	1	0	0.0000	0	0.0000	74			VD
OS185	93.6	1	0	0.0000	0	0.0000	76			ND
W 187	0.99292	1	0	0.0000	0	0.0000	74			SD
RE187	1.72E13	2	1	1.0000	0	0.0000	75			NW
OS191	15.4	1	0	0.0000	0	0.0000	76			ND
IR192	74.02	1	0	0.0000	0	0.0000	77			NY
HG203	46.6	1	0	0.0000	0	0.0000	80			ND
CF252	963.895	1	0	0.0000	0	0.0000	98			SW
CM248	1.238E8	2	1	0.9691	0	0.0000	96			SW
CM244	6614.68	3	0	0.0000	0	0.0000	96			SW
PU244	30.17E9	4	2	0.9174	0	0.0000	94			SY
U 240	0.5875	5	4	0.9988	0	0.0000	92			SY
PU240	2.388E6	6	5	1.0000	3	1.0000	94			SY
U 236	8.552E9	7	6	1.0000	0	0.0000	92			VY

PU236	1.04E+3	1	0	0.0000	0	0.0000	94			SW	PU236	1041.33	1	0	0.0000	0	0.0000	94			SY
U 232	2.36E+4	2	1	1.0000	0	0.0000	92			VY	U 232	26298.0	2	1	1.0000	0	0.0000	92			VY
TH232	5.13E12	3	0	0.0000	0	0.0000	90			SW	TH232	5.13E12	3	0	0.0000	0	0.0000	90			SY
RA228	2.10E+3	4	3	1.0000	0	0.0000	88		1	VW	RA228	2100.19	4	3	1.0000	0	0.0000	88		1	VW
AC228	2.55E-1	5	4	1.0000	0	0.0000	89			SD	AC228	0.25542	5	4	1.0000	0	0.0000	89			SY
TH228	6.98E+2	6	5	1.0000	2	1.0000	90			SW	TH228	698.796	6	5	1.0000	2	1.0000	90			SY
RA224	3.62E+0	7	6	1.0000	0	0.0000	88		1	SW	RA224	3.62	7	6	1.0000	0	0.0000	88		1	SW
PB212	4.43E-1	8	7	1.0000	0	0.0000	82			SD	PB212	0.44346	8	7	1.0000	0	0.0000	82			SD
BI212	4.20E-2	9	8	1.0000	0	0.0000	83			ND	BI212	0.04205	9	8	1.0000	0	0.0000	83			NW
CM246	1.73E+6	1	0	0.0000	0	0.0000	96			SW	CM246	1.735E6	1	0	0.0000	0	0.0000	96			SW
AM242M	5.55E+4	1	0	0.0000	0	0.0000	95			SW	AM242M	55518.0	2	0	0.0000	0	0.0000	95			SW
AM242	6.68E-1	2	1	0.9952	0	0.0000	95			SW	AM242	0.6675	3	2	0.9952	0	0.0000	95			SW
CM242	1.63E+2	3	2	0.8270	0	0.0000	96			SW	CM242	163.2	4	3	0.8270	0	0.0000	96			SW
PU242	1.37E+8	4	2	0.1730	0	0.0000	94			SW	PU242	1.373E8	5	3	0.1730	1	0.9997	94			SY
NP238	2.12E+0	5	1	0.0048	0	0.0000	93			SW	NP238	2.117	6	2	0.0048	0	0.0000	93			SW
PU238	3.20E+4	6	5	1.0000	3	1.0000	94			SW	PU238	32050.7	7	6	1.0000	4	1.0000	94			SY
U 238	1.63E12	1	0	0.0000	0	0.0000	92			VY	U 234	8.930E7	8	7	1.0000	0	0.0000	92			VY
TH234	2.41E+1	2	1	1.0000	0	0.0000	90			SY	U 238	1.63E12	1	0	0.0000	0	0.0000	92			VY
PA234	2.79E-1	3	2	0.0016	0	0.0000	91			SY	TH234	24.1	2	1	1.0000	0	0.0000	90			SY
U 234	8.29E+7	1	0	0.0000	0	0.0000	92			VY	PA234	0.27917	3	2	0.0016	0	0.0000	91			SY
TH230	2.81E+7	1	0	0.0000	0	0.0000	90			SW	TH230	2.812E7	1	0	0.0000	0	0.0000	90			SY
RA226	5.84E+5	2	1	1.0000	0	0.0000	88	T	1	VW	RA226	584400.	2	1	1.0000	0	0.0000	88	T	1	VW
RN222	3.82E+0	3	2	1.0000	0	0.0000	86	T		ND	RN222	3.8235	3	2	1.0000	0	0.0000	86	T		ND
PB210	8.12E+3	4	3	1.0000	0	0.0000	82	T		VD	PB210	8130.47	4	3	1.0000	0	0.0000	82	T		VD
BI210	5.01E+0	5	4	1.0000	0	0.0000	83	T		NW	BI210	5.013	5	4	1.0000	0	0.0000	83	T		NW
PO210	1.38E+2	6	5	1.0000	0	0.0000	84	T		ND	PO210	138.378	6	5	1.0000	0	0.0000	84	T		NW
CM245	3.10E+6	1	0	0.0000	0	0.0000	96			SW	CM245	3.105E6	1	0	0.0000	0	0.0000	96			SW
PU241	5.26E+3	2	1	1.0000	0	0.0000	94			SW	PU241	5259.6	2	1	1.0000	0	0.0000	94			SY
AM241	1.58E+5	3	2	1.0000	0	0.0000	95	T		SW	U 237	6.75	3	2	2.45-5	0	0.0000	92			SY
PU237	4.53E+1	1	0	0.0000	0	0.0000	94			SY	AM241	157861.	4	2	1.0000	0	0.0000	95	T		SW
U 237	6.75E+0	2	0	0.0000	0	0.0000	92			SY	PU237	45.3	5	0	0.0000	0	0.0000	94			SY
NP237	7.81E+8	3	2	1.0000	1	1.0000	93			SW	NP237	7.816E8	6	5	1.0000	4	1.0000	93			SW
PA233	2.70E+1	4	3	1.0000	0	0.0000	91			SY	PA233	27.0	7	6	1.0000	0	0.0000	91			SY
U 233	5.58E+7	1	0	0.0000	0	0.0000	92			VY	U 233	5.815E7	1	0	0.0000	0	0.0000	92			VY
TH229	2.68E+6	2	1	1.0000	0	0.0000	90			SW	TH229	2.681E6	2	1	1.0000	0	0.0000	90			SY
RA225	1.48E+1	3	2	1.0000	0	0.0000	88		1	SW	RA225	14.8	3	2	1.0000	0	0.0000	88		1	SW
AC225	1.00E+1	4	3	1.0000	0	0.0000	89			SD	AC225	10.0	4	3	1.0000	0	0.0000	89			SY
CM247	5.69E+9	1	0	0.0000	0	0.0000	96			SW	CM247	5.698E9	1	0	0.0000	0	0.0000	96			SW
CM243	1.04E+4	2	0	0.0000	0	0.0000	96			SW	CM243	10409.6	2	0	0.0000	0	0.0000	96			SW
PU243	1.92E-1	3	1	1.0000	0	0.0000	94			SW	PU243	0.2065	3	1	1.0000	0	0.0000	94			SY
AM243	2.69E+6	4	3	1.0000	2	0.0024	95			SW	AM243	2.696E6	4	3	1.0000	2	0.0024	95			SW
NP239	2.36E+0	5	4	1.0000	0	0.0000	93			SW	NP239	2.355	5	4	1.0000	0	0.0000	93			SW
PU239	8.81E+6	6	5	1.0000	2	0.9976	94	T		SW	PU239	8.814E6	6	5	1.0000	2	0.9976	94	T		SY
U 235	2.57E11	1	0	0.0000	0	0.0000	92			VY	U 235	257.1E9	1	0	0.0000	0	0.0000	92			VY
TH231	1.06E+0	2	1	1.0000	0	0.0000	90			SY	TH231	1.06333	2	1	1.0000	0	0.0000	90			SY
PA231	1.36E+7	3	2	1.0000	0	0.0000	91			SW	PA231	1.197E7	3	2	1.0000	0	0.0000	91			SY
AC227	7.95E+3	4	3	1.0000	0	0.0000	89			SD	AC227	7952.59	4	3	1.0000	0	0.0000	89			SY
TH227	1.87E+1	5	4	0.9862	0	0.0000	90			SY	TH227	18.718	5	4	0.9862	0	0.0000	90			SY
FR223	1.51E-2	6	4	0.0138	0	0.0000	87			ND	FR223	0.01514	6	4	0.0138	0	0.0000	87			ND
RA223	1.14E+1	7	5	1.0000	6	1.0000	88		1	SW	RA223	11.434	7	6	1.0000	5	1.0000	88		1	SW

The first column is the name of the nuclide. The second column is the halflife in days. The third column is the index of the decay chain, i.e., "1" is the first nuclide in the chain, "2" is the second nuclide, and so on. The fourth column is the index of the ancestor of this nuclide. The fifth column is the branching ratio for this transition. The 6th and 7th columns are the same as the 4th and 5th, in those cases where a nuclide may have two ancestors. As an example, PU239 is produced by 100% of the decays of NP239, and 99.76% of the decays of AM243. The 8th column is the atomic number of the nuclide. The last two characters show the ICRP 30 bone model used for this nuclide, and the inhalation solubility class. These two columns are only used by the INTDF program when generating internal dose factors.

2.0 CHANGES TO THE INTERNAL DOSE INCREMENT LIBRARIES

Since changes to RMDLIB.DAT could also change the internal dose increment values used by GENII, all of the internal dose factor libraries were rerun. The newer versions of the yearly dose increment libraries incorporate several changes from the December, 1990 libraries issued with GENII Version 1.485. The changes to the libraries are listed below.

(1) Worst-case dose factors (MAX library) are truly the worst-case, being based solely on the 50 year Effective Dose Equivalent. The only exception is strontium. As in the 1990 libraries, the class D strontium is used rather than the rare class Y. All nuclides which have changed from the 1990 MAX library are listed below.

Rh-103m	now D instead of Y
In-114m	now W instead of D
Sb-125	f1 is now 0.1 instead of 0.01
Sb-126m	now D instead of W
Te-123m	now D instead of W
Te-129	now D instead of W
Te-131	now D instead of W
Te-133m	now D instead of W
Te-133	now D instead of W
Te-134	now D instead of W
Th-228	now Y instead of W
Th-231	now W instead of Y
Pu-237	f1 is now 1E-5 instead of 1E-3
Pu-243	now Y instead of W
Cf-252	now Y instead of W

(2) The only change to the insoluble library with worst case ingestion dose factors (Y2 library) was to make strontium class D rather than class Y.

(3) Tc and Re have stomach wall as a target organ. When computing EDE, the stomach wall dose is normally added to the stomach dose. However, GENII Version 1.485 incorrectly adds the stomach wall dose to the upper large intestine dose. All the dose increment libraries were modified to remove the stomach wall dose by adding it to the stomach dose. In this way, the error in GENII is avoided.

(4) Several nuclides were treated separately to account for the limitations of the RMDLIB.DAT data structure and the INTDF program.

Cobalt isotopes - to obtain ingestion dose factors for f1=0.3
Th-234 - near end of chain in RMDLIB.DAT, added U-234
Pa-233 - end of chain in RMDLIB.DAT, added U-233 (this increased the doses over the December 1990 libraries)
Pa-234 - end of chain in RMDLIB.DAT, added U-234
U-232 - avoid convergence problems from too many nuclides
U-234 - end of chain in RMDLIB.DAT, added Th-230
U-235 - avoid convergence problems from too many nuclides
U-237 - end of chain in RMDLIB.DAT, added Np-237 & Pa-233
Pu-236 - too many nuclides for INTDF to handle
Pu-244 - avoid convergence problems from too many nuclides
Cm-247 - avoid convergence problems from too many nuclides

The "convergence problem" noted above was only suspected from the screen output and the presence of negative doses for progeny nuclides in the output file. The special treatment of these nuclides eliminated these problems, but actually had little effect (if any) on the committed dose equivalent computed by INTDF. The special radionuclide library used for these nuclides is shown below.

Special RMDLIB.DAT Used by INTDF on Selected Nuclides

```
Special Case Radionuclide Library (7-May-93 PDR)
CO57       270.9    1 0 0.0000 0 0.0000  27      NY
CO58       70.8     1 0 0.0000 0 0.0000  27      NY
CO60       1925.23  1 0 0.0000 0 0.0000  27 T    NY
PU244      30.17E9  1 0 0.0000 0 0.0000  94      SY
U 240      0.5875   2 1 0.9988 0 0.0000  92      SY 1 NP240M  1.000
PU240      2.388E6  3 2 1.0000 0 0.0000  94      SY
PU236      1041.33  1 0 0.0000 0 0.0000  94      SY
U 232      26298.0  2 1 1.0000 0 0.0000  92      VY
TH228      698.796  3 2 1.0000 0 0.0000  90      SY
RA224      3.62     4 3 1.0000 0 0.0000  88    1 SW 2 RN220   1.000 PO216   1.000
PB212      0.44346  5 4 1.0000 0 0.0000  82      SD
BI212      0.04205  6 5 1.0000 0 0.0000  83      NW 2 PO212   .6407 TL208   .3593
TH234      24.1     1 0 0.0000 0 0.0000  90      SY 1 PA234M  0.998
PA234      0.27917  2 1 0.0016 0 0.0000  91      SY
U 234      8.930E7  3 2 1.0000 0 0.0000  92      VY
TH230      2.812E7  4 3 1.0000 0 0.0000  90      SY
RA226      584400.  5 4 1.0000 0 0.0000  88 T 1 VW
U 237      6.75     1 0 0.0000 0 0.0000  92      SY
NP237      7.816E8  2 1 1.0000 0 0.0000  93      SW
PA233      27.0     3 2 1.0000 0 0.0000  91      SY
U 233      5.815E7  4 3 1.0000 0 0.0000  92      VY
TH229      2.681E6  5 4 1.0000 0 0.0000  90      SY
CM247      5.698E9  1 0 0.0000 0 0.0000  96      SW
PU243      0.2065   2 1 1.0000 0 0.0000  94      SY
AM243      2.696E6  3 2 1.0000 0 0.0000  95      SW
NP239      2.355    4 3 1.0000 0 0.0000  93      SW
U 235      257.1E9  1 0 0.0000 0 0.0000  92      VY
TH231      1.06333  2 1 1.0000 0 0.0000  90      SY
PA231      1.197E7  3 2 1.0000 0 0.0000  91      SY
                    0 0 0.0000 0 0.0000
```

(5) Some truncation errors in the dose increment files were corrected. INTDF does not transfer all of the yearly doses for an organ to the dose increment file if they are too small. When there appeared to be a truncation error, the missing dose was added to the dose for the last year. Additional detail and examples are provided below.

Before INTDF writes out the yearly doses for each organ, it finds the maximum yearly dose in any of the organs. Dose increments which are less than 0.1% of this maximum are not reported. Ingestion and inhalation are treated separately. Organs which receive little dose often have a major share of the total dose eliminated by this algorithm. An example of this truncation is shown on the next page for Be-10.

Committed Dose Summary for Be-10, Class W, from INTDF
(Thyroid dose, the last organ, is not shown)

```
BE10    Class: W Fl:   0.00500     07/23/93  15:52:10.1   Acute  Sv/Bq
 11  1  3  4  5  6  7  8 11 12 13 14
     Lung    Stomach S Int.  UL Int. LL Int. Bone SurR MarrowTestes  Ovaries Muscl
G 70 2.4E-11 3.2E-10 7.6E-10 4.3E-09 1.3E-08 2.1E-09 7.3E-10 2.4E-11 2.4E-11 2.4E-
H 70 4.2E-08 7.4E-10 9.7E-10 2.8E-09 7.1E-09 5.2E-08 1.8E-08 5.9E-10 6.0E-10 5.9E-
```

Ingestion Yearly Dose Increments for Be-10, Class W, from INTDF
(Yearly doses less than 3.3E-13 are left off by INTDF)
(Organs names have been added for clarity)

```
! BE10    Class: W Fl:   0.00500     07/23/93  15:52:10.1   Acute  Sv/Bq
 11  1  3  4  5  6  7  8 11 12 13 14
  1  1  1  1  1 20 13  1  1  1  1
G 4.6E-12   { Lung - 1 year is left after truncation }
G 3.0E-10   { Stomach - also only 1 year }
G 7.4E-10   { Small Intestine }
G 4.3E-09   { Upper Large Intestine }
G 1.3E-08   { Lower Large Intestine }
G 3.3E-10 2.8E-10 2.4E-10 2.0E-10 1.7E-10 1.4E-10 1.2E-10 1.0E-10 8.6E-11
  7.3E-11 6.1E-11 5.2E-11 4.4E-11 3.7E-11 3.1E-11 2.6E-11 2.2E-11 1.9E-11
  1.6E-11 1.3E-11 { Bone Surface - largest yearly dose is 3.3E-10 Sv }
G 1.1E-10 9.6E-11 8.1E-11 6.8E-11 5.8E-11 4.9E-11 4.1E-11 3.5E-11 2.9E-11
  2.5E-11 2.1E-11 1.8E-11 1.5E-11 { Red Marrow - 13 years of dose }
G 4.6E-12   { Testes - truncated after 1 year }
G 4.6E-12   { Ovaries - ditto }
G 4.6E-12   { Muscle  - ditto }
G 4.8E-12   { Thyroid - ditto }
```

Modified Ingestion Dose Increments for Be-10, Class W

```
! BE10    Class: W Fl:   0.00500     07/23/93  15:52:10.1   Acute  Sv/Bq
 11  1  3  4  5  6  7  8 11 12 13 14
  2  2  2  1  1 20 13  2  2  2  2 { number of years of data is increased }
G 4.6E-12 1.94-11
G 3.0E-10 2.00-11 { created 2nd year with missing dose }
G 7.4E-10 2.00-11
G 4.3E-09
G 1.3E-08
G 3.3E-10 2.8E-10 2.4E-10 2.0E-10 1.7E-10 1.4E-10 1.2E-10 1.0E-10 8.6E-11
  7.3E-11 6.1E-11 5.2E-11 4.4E-11 3.7E-11 3.1E-11 2.6E-11 2.2E-11 1.9E-11
  1.6E-11 1.3E-11
G 1.1E-10 9.6E-11 8.1E-11 6.8E-11 5.8E-11 4.9E-11 4.1E-11 3.5E-11 2.9E-11
  2.5E-11 2.1E-11 1.8E-11 9.90-11 { 13th year dose is increased }
G 4.6E-12 1.94-11
G 4.6E-12 1.94-11
G 4.6E-12 1.94-11
G 4.8E-12 2.02-11
```

The first table on page 8 shows a portion of the committed doses. The last column, containing the thyroid dose, was omitted so it would fit on the page. The committed dose summary is printed prior to truncation and gives the actual values computed by INTDF.

The second table on page 8 shows the contents of the yearly dose increment file for Be-10. The truncation process in INTDF has eliminated most of the dose to the first 3 and last 4 organs.

The last table for Be-10 shows what is actually used in the revised dose increment files. The missing dose is stored in the second year for those organs with only one year of dose values. Otherwise, the missing dose is added to the dose for the last year. Because the organs which are affected are minor contributors to the Effective Dose Equivalent (EDE), the correction has little effect on the final answer for EDE. However, the organ doses are now correct. In the modified dose increment files, all new doses are in the peculiar (but FORTRAN readable) scientific format with the "E" removed.

As a second example, the original and revised library values for Tc-99 are shown on pages 10 and 11, below. The stomach wall (second last organ) dose was added to the stomach dose (second organ) and deleted from the file.

All changes to the yearly dose increment files, as well as their combination into the final libraries (D, W, Y, PNL, MAX, and Y2) were automated using a program written in Pascal for this purpose. The hundreds of minor changes to the files were thus performed without introducing errors by hand-copying the numbers. Verification testing of the program was accomplished by comparing a few key nuclides in each library. These were Be-10, Co-60, Sr-90, Tc-99, Re-187, and Pu-239. Additional testing is described in the next section.

As a final note about the INTDF runs, the following nuclides were treated as inert gases by INTDF: Be-7, Rb-90m, Rb-90, Sb-129, and Cs-139. The INTDF had no specific effective energies for these five nuclides, therefore, no internal dose factors were computed. These nuclides will also be treated as inert gases by GENII, i.e., there will be no inhalation or ingestion dose computed for any of them.

Acute Committed Dose Summary for Tc-99, Class W, from INTDF

```
TC99    Class: W F1:   0.80000     07/23/93  16:08:08.5   Acute  Sv/Bq
 13  1  3  4  5  6  7  8 11 12 13 14 22 17
     Lung    Stomach S Int.  UL Int. LL Int. Bone SurR MarrowTestes  Ovaries Muscle  Thyroid S Wall  Liver
G 70 6.3E-11 3.4E-09 1.2E-10 4.1E-10 1.1E-09 7.4E-11 7.4E-11 6.3E-11 6.3E-11 6.3E-11 1.6E-09 3.4E-09 8.6E-11
H 70 1.7E-08 2.3E-09 7.2E-11 2.2E-10 5.8E-10 4.9E-11 4.9E-11 4.1E-11 4.1E-11 4.1E-11 1.1E-09 2.3E-09 5.6E-11
```

Chronic Committed Dose Summary for Tc-99, Class W, from INTDF

```
TC99    Class: W F1:   0.80000     07/23/93  18:06:43.4   ChronicSv per 70 yr/Bq
 13  1  3  4  5  6  7  8 11 12 13 14 22 17
     Lung    Stomach S Int.  UL Int. LL Int. Bone SurR MarrowTestes  Ovaries Muscle  Thyroid S Wall  Liver
G 70 4.4E-09 2.4E-07 8.6E-09 2.9E-08 7.8E-08 5.2E-09 5.2E-09 4.4E-09 4.4E-09 4.4E-09 1.1E-07 2.4E-07 6.0E-09
H 70 1.2E-06 1.6E-07 5.0E-09 1.5E-08 4.0E-08 3.4E-09 3.4E-09 2.9E-09 2.9E-09 2.9E-09 7.5E-08 1.6E-07 3.9E-09
```

Yearly Dose Increments for Tc-99, Class W, from INTDF

Note: Yearly ingestion/inhalation doses less than 3.4E-12/2.2E-12 are omitted by INTDF. Hence the CDE values given above do not always match the sum of the yearly increments.

```
! TC99    Class: W F1:   0.80000     07/23/93  16:08:08.5   Acute  Sv/Bq
 13  1  3  4  5  6  7  8 11 12 13 14 22 17 { organ #22 is the stomach wall }
  1  1  1  1  1  1  1  1  1  1  1  1  1
G 6.3E-11
G 3.4E-09  { stomach dose }
G 1.2E-10
G 4.1E-10
G 1.1E-09
G 7.4E-11
G 7.4E-11
G 6.3E-11
G 6.3E-11
G 6.3E-11
G 1.6E-09
G 3.4E-09  { stomach wall dose }
G 8.6E-11
  2  1  1  1  1  1  1  1  1  1  1  1  1
H 1.6E-08 1.4E-10
H 2.2E-09  { stomach dose from inhaled Tc-99 }
H 7.2E-11
H 2.2E-10
H 5.8E-10
H 4.9E-11
H 4.9E-11
H 4.1E-11
H 4.1E-11
H 4.1E-11
H 1.1E-09
H 2.2E-09  { stomach wall dose }
H 5.6E-11
```

Acute Committed Dose Summary for Tc-99, Class W, Modified by PDR

```
TC99    Class: W F1:   0.80000     07/23/93  16:08:08.5   Acute  Sv/Bq
 12  1  3  4  5  6  7  8 11 12 13 14 17
     Lung    Stomach S Int.  UL Int. LL Int. Bone SurR MarrowTestes  Ovaries Muscle  Thyroid Liver
G 70 6.3E-11 6.8E-09 1.2E-10 4.1E-10 1.1E-09 7.4E-11 7.4E-11 6.3E-11 6.3E-11 6.3E-11 1.6E-09 8.6E-11
H 70 1.7E-08 4.6E-09 7.2E-11 2.2E-10 5.8E-10 4.9E-11 4.9E-11 4.1E-11 4.1E-11 4.1E-11 1.1E-09 5.6E-11
```

Chronic Committed Dose Summary for Tc-99, Class W, Modified by PDR

```
TC99    Class: W F1:   0.80000     07/23/93  18:06:43.4   ChronicSv per 70 yr/Bq
 12  1  3  4  5  6  7  8 11 12 13 14 17
     Lung    Stomach S Int.  UL Int. LL Int. Bone SurR MarrowTestes  Ovaries Muscle  Thyroid Liver
G 70 4.4E-09 4.8E-07 8.6E-09 2.9E-08 7.8E-08 5.2E-09 5.2E-09 4.4E-09 4.4E-09 4.4E-09 1.1E-07 6.0E-09
H 70 1.2E-06 3.2E-07 5.0E-09 1.5E-08 4.0E-08 3.4E-09 3.4E-09 2.9E-09 2.9E-09 2.9E-09 7.5E-08 3.9E-09
```

Modified Yearly Dose Increments for Tc-99, Class W

```
! TC99    Class: W F1:   0.80000     07/23/93  16:08:08.5   Acute  Sv/Bq
 12  1  3  4  5  6  7  8 11 12 13 14 17
  1  1  1  1  1  1  1  1  1  1  1  1
G 6.3E-11
G 6.80-09 { stomach dose is now twice as large; S Wall removed }
G 1.2E-10
G 4.1E-10
G 1.1E-09
G 7.4E-11
G 7.4E-11
G 6.3E-11
G 6.3E-11
G 6.3E-11
G 1.6E-09
G 8.6E-11
  2  2  1  1  1  1  1  1  1  1  1  1
H 1.6E-08 1.00-09
H 4.40-09 2.00-10 { first year doses were added, excess placed in 2nd year }
H 7.2E-11
H 2.2E-10
H 5.8E-10
H 4.9E-11
H 4.9E-11
H 4.1E-11
H 4.1E-11
H 4.1E-11
H 1.1E-09
H 5.6E-11
```

3.0 HOW DO THESE CHANGES AFFECT GENII CALCULATIONS?

To establish the overall impact of these changes to RMDLIB.DAT and the dose increment files, four GENII input files were used for each solubility class of each nuclide in the library. The scenarios considered are summarized below.

(1) Acute air transport to a location 100 meters north in the 200 Areas. This receptor receives only inhalation and submersion dose.

(2) Acute air transport to a location 16,000 meters east of a release in the 200 Areas. This receptor receives external dose from ground contamination and ingestion dose from food products as well as inhalation and submersion dose from the plume.

(3) Contaminated soil which has been decaying for 100 years. The "Post-Excavation" Intruder Scenarios in performance assessment analyses use scenario assumptions of this nature. The person exposed receives external dose from ground contamination, inhalation dose from resuspended dust, and ingestion dose from vegetable products grown in a resident's garden.

(4) Contaminated soil which has been decayed for 1000 years. This is the same as (3) except for the preliminary decay time.

Sample input files are attached for reference. The current version of GENII (1.485) was used for these, along with wind data for ground level releases from the 200 Areas (1983-1987 Average). The tests using the new RMDLIB.DAT and new internal dose increment libraries also used the new FTRANS.DAT which adds Francium (assumed to be the same as cesium) and Osmium (uses values from NUREG-5512 (Kennedy 1992), and the same leaching factor as iridium). The new FTRANS.DAT is listed in the attachments.

The resulting output using both versions of RMDLIB.DAT were compared using a program which would read the DOSEQA.OUT files and compare the results. Nuclides for which the dose differences were less than ten percent, or for which the actual doses were less than 1.0E-20 rem are not shown.

From the difference tables it can be seen that the number of significant changes is small. These changes are necessary to correct deficiencies in the previous version of the data files. The decay chain revisions principally affect only Test Cases 3 and 4, which have long decay times.

Explanatory Notes for the Comparison Tables Below

Note 1: Small changes in halflife change the resulting dose appreciably after several halflives. The rounding to two significant digits (both in INTDF and GENII) exaggerates this change.

Note 2: Switching the 1st and 2nd parent indices caused GENII to include the daughter rather than ignore it.

Note 3: Stomach Wall dose is now treated correctly. (Stomach doses are now roughly twice what they were before.)

Note 4: Halflife of this nuclide, or its first daughter, changed by more than 5 percent. Changes to U-232 affect both U-232 and Pu-236. Changes to Pa-231 affect both Pa-231 and Th-231.

Note 5: U-237 included under Pu-241, thereby increasing the Pu-241 dose, but U-237 is no longer parent of Np-237 (except in a special RMDLIB used in the INTDF runs).

Note 6: Fr and Os added to FTRANS.DAT, ingestion dose is now computed. External dose increases due to a smaller leaching factor.

Note 7: Revised decay chain for Cf-252 includes Cm-248 and Cm-244.

Note 8: U-234 now included in the decay chain of Pu-238. For long decay times, this also affects Np-238, Cm-242 and Am-242.

Note 9: Np-237 now included in the decay chains for Am-241 and Pu-237.

Percent Differences for Case 1: Air Transport 100 meters

Class D	Inhale	Extern	Total	Organ	Note
Rb-90	Old=0			Old=0	2
Tc-99m				20.0	3
Tc-99				81.8	3
Re-187				91.2	3
Class W	**Inhale**	**Extern**	**Total**	**Organ**	**Note**
Pu-241		83.9			5
Pu-243	11.8		11.1	8.2	4
Class Y	**Inhale**	**Extern**	**Total**	**Organ**	**Note**
Pu-241		83.9			5
Pu-243	11.8		11.1	8.0	4

Percent Differences for Case 2: Air Transport 16000 meters (farmer)
(Negative values mean the new RMDLIB.DAT doses are smaller)

Class D	Inhale	Ingest	Extern	Total	Organ	Season	Note
Rb-90	Old=0	Old=0	Old=0	Old=0	Old=0	Winter	2
Rb-90	Old=0	Old=0	Old=0	Old=0	Old=0	Spring	
Rb-90	Old=0	Old=0	Old=0	Old=0	Old=0	Summer	
Rb-90	Old=0	Old=0	Old=0	Old=0	Old=0	Autumn	
Tc-99m					22.6	Winter	3
Tc-99m					18.7	Spring	
Tc-99m					18.7	Summer	
Tc-99m					18.7	Autumn	
Tc-99					80.6	Winter	3
Tc-99					77.8	Spring	
Tc-99					78.6	Summer	
Tc-99					79.1	Autumn	
Tc-101	6.9		5.9	8.3	14.3	Winter	3
Tc-101	6.9		5.9	8.3	14.3	Spring	
Tc-101	6.9		5.9	8.3	14.3	Summer	
Tc-101	6.9		5.9	8.3	14.3	Autumn	

Pd-103		2.6	10.0	3.7		Winter	2
Pd-103		1.5	10.0			Spring	
Pd-103		1.2	10.0			Summer	
Pd-103			10.0			Autumn	
Te-129m	3.6		122.2	3.3		Winter	2
Te-129m	3.6	1.3	122.2			Spring	
Te-129m	3.6		122.2			Summer	
Te-129m	3.6		122.2	2.0		Autumn	
Xe-122			373.7	373.7		Winter	4
Xe-122			373.7	373.7		Spring	
Xe-122			373.7	373.7		Summer	
Xe-122			373.7	373.7		Autumn	
Cs-134m				10.0		Autumn	1
Re-187					94.7	Winter	3
Re-187					85.2	Spring	
Re-187					78.8	Summer	
Re-187					80.0	Autumn	
Os-185		Old=0	2.1E+03	84.4		Winter	6
Os-185		Old=0	2.1E+03	2.3E+03	3.4E+03	Spring	
Os-185		Old=0	2.1E+03	3.0E+03	4.3E+03	Summer	
Os-185		Old=0	2.1E+03	1.7E+04	2.5E+04	Autumn	
Os-191		Old=0	225.8	2.5		Winter	6
Os-191		Old=0	225.8	3.3E+03	1.1E+04	Spring	
Os-191		Old=0	225.8	4.0E+03	1.3E+04	Summer	
Os-191		Old=0	225.8	7.4E+03	2.4E+04	Autumn	
Fr-223	1.8E+06	Old=0	4.2E+04	1.8E+06	1.9E+06	Winter	2
Fr-223	1.8E+06	Old=0	4.2E+04	1.8E+06	1.9E+06	Spring	
Fr-223	1.8E+06	Old=0	4.2E+04	1.8E+06	1.9E+06	Summer	
Fr-223	1.8E+06	Old=0	4.2E+04	1.9E+06	1.9E+06	Autumn	
U-237		-31.1				Winter	5

Class W	Inhale	Ingest	Extern	Total	Organ	Season	Note
Tc-99	3.7				80.6	Winter	3
Tc-99	3.7			1.7	75.0	Spring	
Tc-99	3.7				78.6	Summer	
Tc-99	3.7				79.1	Autumn	
Tc-101	10.0		5.9	5.6	6.7	Winter	3
Tc-101	10.0		5.9	5.6	6.7	Spring	
Tc-101	10.0		5.9	5.6	6.7	Summer	
Tc-101	10.0		5.9	5.6	6.7	Autumn	
Pd-103		2.6	10.0			Winter	2
Pd-103		1.5	10.0			Spring	
Pd-103		1.2	10.0			Summer	
Pd-103			10.0	3.8		Autumn	
Sn-119m	5.3	2.1		10.5	7.7	Winter	1
Te-129m			122.2	1.4		Winter	2
Te-129m		1.3	122.2			Spring	
Te-129m			122.2	5.0		Summer	
Te-129m			122.2	1.8		Autumn	
Re-187	5.6			5.6		Winter	3
Re-187	5.6				15.4	Spring	
Re-187	5.6				78.8	Summer	
Re-187	5.6				80.0	Autumn	
Os-185		Old=0	2.1E+03	128.6		Winter	6

Os-185		Old=0	2.1E+03	3.6E+03	4.5E+03	Spring	
Os-185		Old=0	2.1E+03	4.6E+03	5.7E+03	Summer	
Os-185		Old=0	2.1E+03	2.6E+04	3.4E+04	Autumn	
Os-191		Old=0	225.8			Winter	6
Os-191		Old=0	225.8	2.2E+03	4.5E+03	Spring	
Os-191		Old=0	225.8	2.7E+03	5.3E+03	Summer	
Os-191		Old=0	225.8	4.9E+03	9.9E+03	Autumn	
Th-231	4.3	13.3		4.3	12.2	Winter	4
Th-231	4.3	8.0		7.1	17.6	Autumn	
U-237		-31.1				Winter	5
Pu-236	-4.3	-5.6	-11.2	-4.3	-4.9	Winter	4
Pu-236	-4.3	-4.8	-11.2	-6.3	-6.1	Spring	
Pu-236	-4.3	-5.7	-11.2	-5.7	-5.5	Summer	
Pu-236	-4.3	-6.9	-11.2	-5.3		Autumn	
Pu-241			61.5			Winter	5
Pu-241			61.5			Spring	
Pu-241			61.5			Summer	
Pu-241			61.5			Autumn	
Pu-243	10.7	10.2	7.7	6.7		Winter	4
Pu-243	10.7	18.2	7.7	6.7		Spring	
Pu-243	10.7	7.7	7.7	9.7	4.5	Summer	
Pu-243	10.7	7.1	7.7	8.1	6.2	Autumn	

Class Y	Inhale	Ingest	Extern	Total	Organ	Season	Note
Pd-103		2.6	10.0	2.0		Winter	2
Pd-103		1.5	10.0			Spring	
Pd-103		1.2	10.0			Summer	
Pd-103			10.0			Autumn	
Os-185		Old=0	2.1E+03	87.1		Winter	6
Os-185		Old=0	2.1E+03	2.4E+03	1.9E+03	Spring	
Os-185		Old=0	2.1E+03	3.1E+03	2.4E+03	Summer	
Os-185		Old=0	2.1E+03	1.8E+04	1.5E+04	Autumn	
Os-191		Old=0	225.8			Winter	6
Os-191		Old=0	225.8	2.1E+03	3.6E+03	Spring	
Os-191		Old=0	225.8	2.4E+03	4.3E+03	Summer	
Os-191		Old=0	225.8	4.5E+03	8.0E+03	Autumn	
Th-231		13.3		4.3		Winter	4
U-237		-32.0				Winter	5
Pu-236	-2.4		-11.2	-2.4	-7.1	Winter	4
Pu-236	-2.4		-11.2	-2.4	-7.1	Spring	
Pu-236	-2.4		-11.2	-2.4	-7.1	Summer	
Pu-236	-2.4	2.8	-11.2	-2.3	-7.1	Autumn	
Pu-241			61.5			Winter	5
Pu-241			61.5			Spring	
Pu-241			61.5			Summer	
Pu-241			61.5			Autumn	
Pu-243	10.7	10.2	7.7	10.3		Winter	4
Pu-243	10.7	18.2	7.7	10.3	7.7	Spring	
Pu-243	10.7	7.7	7.7	9.7	6.7	Summer	
Pu-243	10.7	7.1	7.7	11.1	3.8	Autumn	

Percent Differences for Case 3: Intruder at 100 years
(Negative values mean the new RMDLIB.DAT doses are smaller)

Class D	Inhale	Ingest	Extern	Total	Organ	Note
Fe-55	9.1	14.3	8.2	15.0	12.2	1
Rb-90	Old=0	Old=0	Old=0	Old=0	Old=0	2
Sr-87m		Old=0	Old=0	Old=0	Old=0	2
Mo-99					83.3	1
Tc-99m					76.5	3
Tc-99					76.9	3
Te-129m	169.7	165.0	166.7	165.0	168.7	2
I-135	1.1		2.6		10.0	1
W-187					81.8	1
Re-187					75.0	3
U-232	14.3	12.0	13.3	12.5	17.4	4
U-235	10.8	7.9		4.0	8.8	1
U-237	New=0	New=0	New=0	New=0	New=0	5

Class W	Inhale	Ingest	Extern	Total	Organ	Note
Fe-55	10.9	14.3	8.2	15.0	12.2	1
Co-60	11.4	10.0	8.3	8.3	16.7	1
Tc-99m	5.3				76.5	3
Tc-99	4.3				76.9	3
Te-129m	169.7	165.0	166.7	165.0	168.7	2
Re-187					75.0	3
Th-231	14.3	9.9	13.7	18.2	12.0	4
U-232	16.1	12.0	13.3	12.5	13.0	4
U-237	New=0	New=0	New=0	New=0	New=0	5
Cf-252	2.4E+09	1.7E+09	1.8E+08	2.1E+09	2.0E+09	7

Class Y	Inhale	Ingest	Extern	Total	Organ	Note
Co-60	9.1	10.0	8.3	8.3	16.7	1
Sr-87m		Old=0	Old=0	Old=0	Old=0	2
Mo-99	4.8				83.3	3
Th-231	10.0	9.9	13.7	9.1	13.0	4
U-232	14.3	12.7	13.3	17.6	11.8	4
U-237	New=0	New=0	New=0	New=0	New=0	5
U-240		10.0				1
Cf-252	2.1E+09	1.7E+09	1.8E+08	1.9E+09	3.8E+09	7

Percent Differences for Case 4: Intruder at 1000 years
(Negative values mean the new RMDLIB.DAT doses are smaller)

Class D	Inhale	Ingest	Extern	Total	Organ	Note
Kr-90	7.7	11.9	12.5	11.9	13.3	2
Rb-90m	10.0	15.2	15.4	15.2	17.1	2
Rb-90	Old=0	Old=0	Old=0	Old=0	Old=0	2
Sr-87m		Old=0	Old=0	Old=0	Old=0	2
Sr-90	11.1	8.3	10.9	8.3	7.7	1
Mo-99					77.8	3

Tc-99m					76.5	3
Tc-99					76.9	3
Cd-113m		10.2		10.2	9.0	1
Te-129m	169.7	165.0	166.7	165.0	168.7	2
I-135	1.1		2.6		10.0	1
W-187					81.8	3
Re-187					75.0	3
U-232	197.3	190.9	192.9	190.9	187.5	4
U-235	10.0	8.3	4.5	5.5	11.3	1
U-237	New=0	New=0	New=0	New=0	New=0	5

Class W	Inhale	Ingest	Extern	Total	Organ	Note
Tc-99m	5.3				76.5	3
Tc-99	4.3				76.9	3
Cd-113m		10.2		10.2	9.0	1
Te-129m	169.7	165.0	166.7	165.0	168.7	2
Re-187					75.0	3
Th-231	14.3	9.9	13.3	18.2	16.7	4
U-232	197.3	190.9	192.9	190.9	200.0	4
U-235	10.5	8.3	4.5	6.0	11.5	1
U-237	New=0	New=0	New=0	New=0	New=0	5
Np-238	1.7	69.2	308.3	9.2	8.3	8
Pu-236	170.6	164.0	160.9	160.0	167.6	4
Pu-238	2.2	70.0	294.7	10.0	5.6	8
Pu-241		46.1	3.7	17.9	22.0	5,9
Am-241		53.8	4.3	17.3	28.6	9
Am-242	5.9	60.0	251.4	10.5	5.7	8
Cm-242	2.1	70.0	281.4	7.7	6.4	8
Cm-248			22.6			7
Cf-252	Old=0	Old=0	Old=0	Old=0	Old=0	7

Class Y	Inhale	Ingest	Extern	Total	Organ	Note
Sr-87m		Old=0	Old=0	Old=0	Old=0	2
Sr-90	13.6	11.8	10.9	11.1	5.9	1
Mo-99	4.9				77.8	3
Cd-113m		10.2		10.2	9.0	1
Th-231	20.0	9.9	13.3	9.1	13.0	4
U-232	192.9	205.6	192.9	183.3	200.0	4
U-235	1.0	9.1	4.5	5.6	10.9	1
U-237	New=0	New=0	New=0	New=0	New=0	5
Pu-236	165.6	152.9	160.9	159.3	169.2	4
Pu-238	43.9	426.7	294.7	45.5	1.6	8
Pu-241		46.1	3.7	17.9	22.0	5,9
Cf-252	Old=0	Old=0	Old=0	Old=0	Old=0	7

4.0 FINAL WARNING

There is still a significant weakness in the decay calculation GENII performs using the new RMDLIB.DAT. The GENII program is limited to 10 nuclides in a chain, therefore, long decay chains were divided into those segments which are likely to be important in most analyses. Doses calculated for nuclides at the end of segment could be too small because a long-lived radioactive daughter is not included. A complete list of nuclides with this potential problem is shown below.

List of Nuclides with Potential Dose Under-Estimation Due to Decay Chain Termination in RMDLIB.DAT

End of Segment	Missing Progeny
Pa-233	U-233
Pa-234	U-234
Th-234	U-234
U-234	Th-230
U-236	Th-232
U-237	Np-237
Pu-239	U-235
Pu-242	U-238

A special version of RMDLIB.DAT was constructed to quantify the dose under-estimation for the four test cases used above. This special RMDLIB.DAT is shown on the next page. The percent increases for each test case are summarized below.

Case 1 -- no differences
Case 2 -- U-237: 45% winter ingestion (D, W, and Y)
Case 3 -- U-234: 60% external (total increases <5%, D, W, and Y)
Case 4 -- U-234: Percent differences in the table below

	Inhale	Ingest	External	Total	Organ
Class D	100.0	89.5	5500	128.6	110.0
Class W	37.5	89.5	5500	112.5	113.8
Class Y	2.5	1000.0	5500	32.5	1.5

For both intruder scenarios (Case 3 and Case 4), the new radionuclide library gives no dose for U-237, Th-234, Pa-233, or Pa-234, while the special library with the decay daughters of these nuclides did give non-zero doses.

Air transport cases are immune from this problem due to the shorter decay times involved. Moreover, for intruder scenarios, the above nuclides will be present with other nuclides which give much higher doses. Thus the potential dose under-estimation problem disappears for most of the analytical work likely to be done.

Version of RMDLIB.DAT to Verify Chain Length Assumptions

```
Radionuclide Data Library - Special Segments  (29-Apr-93 PDR)
PU240      2.388E6 1 0 0.0000 0 0.0000  94     SW
U 236      8.552E9 2 1 1.0000 0 0.0000  92     VY
TH232      5.13E12 3 2 1.0000 0 0.0000  90     SW
RA228      2100.19 4 3 1.0000 0 0.0000  88   1 VW
AC228      0.25542 5 4 1.0000 0 0.0000  89     SD
TH228      698.796 6 5 1.0000 0 0.0000  90     SW
RA224      3.62    7 6 1.0000 0 0.0000  88   1 SW 2 RN220   1.000 PO216   1.000
PB212      0.44346 8 7 1.0000 0 0.0000  82     SD
BI212      0.04205 9 8 1.0000 0 0.0000  83     ND 2 PO212   .6407 TL208   .3593
U 238      1.63E12 1 0 0.0000 0 0.0000  92     VY
TH234      24.1    2 1 1.0000 0 0.0000  90     SY 1 PA234M  0.998
PA234      0.27917 3 2 0.0016 0 0.0000  91     SY
U 234      8.930E7 4 3 1.0000 2 0.9984  92     VY
TH230      2.812E7 5 4 1.0000 0 0.0000  90     SW
RA226      584400. 6 5 1.0000 0 0.0000  88 T 1 VW
RN222      3.8235  7 6 1.0000 0 0.0000  86 T   ND 4 PO218   1.000 PB214   1.000 BI214
PB210      8130.47 8 7 1.0000 0 0.0000  82 T   VD
BI210      5.013   9 8 1.0000 0 0.0000  83 T   NW
PU241      5259.6  1 0 0.0000 0 0.0000  94     SW
U 237      6.75    2 1 2.45-5 0 0.0000  92     SY
AM241      157861. 3 1 1.0000 0 0.0000  95 T   SW
NP237      7.816E8 4 3 1.0000 2 1.0000  93     SW
PA233      27.0    5 4 1.0000 0 0.0000  91     SY
U 233      5.815E7 6 5 1.0000 0 0.0000  92     VY
TH229      2.681E6 7 6 1.0000 0 0.0000  90     SW
RA225      14.8    8 7 1.0000 0 0.0000  88   1 SW
AC225      10.0    9 8 1.0000 0 0.0000  89     SD 6 FR221   1.000 AT217   1.000 BI213
PU239      8.814E6 1 0 0.0000 0 0.0000  94 T   SW
U 235      257.1E9 2 1 1.0000 0 0.0000  92     VY
TH231      1.06333 3 2 1.0000 0 0.0000  90     SY
PA231      1.197E7 4 3 1.0000 0 0.0000  91     SW
AC227      7952.59 5 4 1.0000 0 0.0000  89     SD
TH227      18.718  6 5 0.9862 0 0.0000  90     SY
FR223      0.01514 7 5 0.0138 0 0.0000  87     ND
RA223      11.434  8 7 1.0000 6 1.0000  88   1 SW 5 RN219   1.000 PO215   1.000 PB211
                   0 0 0.0000 0 0.0000
```

Note: The "+" indicates the line was truncated to fit on this page. Other nuclides are normally present, but they are not used by GENII anyway. The truncated information is unchanged from previous versions of RMDLIB.DAT.

5.0 RMDLIB FOR AIR TRANSPORT CALCULATIONS

Many of the long decay chains used in the above RMDLIB are unnecessary for calculations which involve decay times less than 100 years. All of the typical air transport calculations fall into this category. Shortening the decay chains has the advantage of shortening the run time of air transport calculations. Therefore, a second RMDLIB was created with shorter decay chains. The two versions of RMDLIB are placed side-by-side below to facilitate comparisons. Lines which are the same in both files are not shown.

Long Decay Time and Short Decay Time Versions of RMDLIB.DAT
(order changes are marked)

Radionuclide Master Library, Long Times												Radionuclide Library - Times<100 years											
KR85M	0.18667	1	0	0.0000	0	0.0000	36			ND		KR85M	0.18667	1	0	0.0000	0	0.0000	36			ND	
KR85	3915.48	2	1	0.2110	0	0.0000	36			ND		KR85	3915.48	1	0	0.0000	0	0.0000	36			ND	
KR87	0.05299	1	0	0.0000	0	0.0000	36			ND		KR87	0.05299	1	0	0.0000	0	0.0000	36			ND	
SR87M	0.11688	2	0	0.0000	0	0.0000	38		1	SD		RB87	1.73E13	2	1	1.0000	0	0.0000	37			VD	
RB87	1.73E13	3	2	0.0030	1	1.0000	37			VD		SR87M	0.11688	1	0	0.0000	0	0.0000	38		1	SD	
SB129	0.18333	1	0	0.0000	0	0.0000	51			SW		SB129	0.18333	1	0	0.0000	0	0.0000	51			SW	
TE129M	33.6	2	1	0.1660	0	0.0000	52			SW		TE129M	33.6	2	1	0.1660	0	0.0000	52			SW	
TE129	0.04833	3	2	0.6290	1	0.8340	52			SW		TE129	0.04833	3	2	0.6290	1	0.8340	52			SW	
I 129	5.734E9	4	3	1.0000	2	0.3710	53	T	2	ND		I 129	5.734E9	1	0	0.0000	0	0.0000	53	T	2	ND	
ND147	10.98	1	0	0.0000	0	0.0000	60			SY		ND147	10.98	1	0	0.0000	0	0.0000	60			SY	
PM147	958.197	2	1	1.0000	0	0.0000	61			SY		PM147	958.197	2	1	1.0000	0	0.0000	61			SY	
SM147	3.90E13	3	2	1.0000	0	0.0000	62			SW		SM147	3.90E13	1	0	0.0000	0	0.0000	62			SW	
W 187	0.99292	1	0	0.0000	0	0.0000	74			SD		W 187	0.99292	1	0	0.0000	0	0.0000	74			SD	
RE187	1.72E13	2	1	1.0000	0	0.0000	75			NW		RE187	1.72E13	1	0	0.0000	0	0.0000	75			NW	
CF252	963.895	1	0	0.0000	0	0.0000	98			SW		CF252	963.895	1	0	0.0000	0	0.0000	98			SY	
CM248	1.238E8	2	1	0.9691	0	0.0000	96			SW		CM248	1.238E8	1	0	0.0000	0	0.0000	96			SW	
CM244	6614.68	3	0	0.0000	0	0.0000	96			SW		CM244	6614.68	1	0	0.0000	0	0.0000	96			SW	
PU244	30.17E9	4	2	0.9174	0	0.0000	94			SY		PU244	30.17E9	1	0	0.0000	0	0.0000	94			SW	
U 240	0.5875	5	4	0.9988	0	0.0000	92			SY		U 240	0.5875	2	1	0.9988	0	0.0000	92			SY	
PU240	2.388E6	6	5	1.0000	3	1.0000	94			SY		PU240	2.388E6	3	2	1.0000	0	0.0000	94			SW	
U 236	8.552E9	7	6	1.0000	0	0.0000	92			VY		U 236	8.552E9	1	0	0.0000	0	0.0000	92			VY	
CM246	1.735E6	1	0	0.0000	0	0.0000	96			SW		CM246	1.735E6	1	0	0.0000	0	0.0000	96			SW	
AM242M	55518.0	2	0	0.0000	0	0.0000	95			SW		AM242M	55518.0	1	0	0.0000	0	0.0000	95			SW	
AM242	0.6675	3	2	0.9952	0	0.0000	95			SW		AM242	0.6675	2	1	0.9952	0	0.0000	95			SW	
CM242	163.2	4	3	0.8270	0	0.0000	96			SW		CM242	163.2	3	2	0.8270	0	0.0000	96			SW	
PU242	1.373E8	5	3	0.1730	1	0.9997	94			SY		NP238	2.117	4	1	0.0048	0	0.0000	93			SW	
NP238	2.117	6	2	0.0048	0	0.0000	93			SW		PU238	32050.7	5	4	1.0000	3	1.0000	94			SW	
PU238	32050.7	7	6	1.0000	4	1.0000	94			SY		PU242	1.373E8	1	0	0.0000	0	0.0000	94			SW	
U 234	8.930E7	8	7	1.0000	0	0.0000	92			VY		U 234	8.930E7	1	0	0.0000	0	0.0000	92			VY	
CM245	3.105E6	1	0	0.0000	0	0.0000	96			SW		CM245	3.105E6	1	0	0.0000	0	0.0000	96			SW	
PU241	5259.6	2	1	1.0000	0	0.0000	94			SY		PU241	5259.6	1	0	0.0000	0	0.0000	94			SW	
U 237	6.75	3	2	2.45-5	0	0.0000	92			SY		U 237	6.75	2	1	2.45-5	0	0.0000	92			SY	
AM241	157861.	4	2	1.0000	0	0.0000	95	T		SW		AM241	157861.	3	1	1.0000	0	0.0000	95	T		SW	
PU237	45.3	5	0	0.0000	0	0.0000	94			SY		PU237	45.3	1	0	0.0000	0	0.0000	94			SY	
NP237	7.816E8	6	5	1.0000	4	1.0000	93			SW		NP237	7.816E8	2	1	1.0000	0	0.0000	93			SW	
PA233	27.0	7	6	1.0000	0	0.0000	91			SY		PA233	27.0	3	2	1.0000	0	0.0000	91			SY	
U 235	257.1E9	1	0	0.0000	0	0.0000	92			VY		U 235	257.1E9	1	0	0.0000	0	0.0000	92			VY	
TH231	1.06333	2	1	1.0000	0	0.0000	90			SY		TH231	1.06333	2	1	1.0000	0	0.0000	90			SY	
PA231	1.197E7	3	2	1.0000	0	0.0000	91			SY		PA231	1.197E7	1	0	0.0000	0	0.0000	91			SW	
AC227	7952.59	4	3	1.0000	0	0.0000	89			SY		AC227	7952.59	2	1	1.0000	0	0.0000	89			SD	
TH227	18.718	5	4	0.9862	0	0.0000	90			SY		TH227	18.718	3	2	0.9862	0	0.0000	90			SY	
FR223	0.01514	6	4	0.0138	0	0.0000	87			ND		FR223	0.01514	4	2	0.0138	0	0.0000	87			ND	
RA223	11.434	7	6	1.0000	5	1.0000	88		1	SW		RA223	11.434	5	4	1.0000	3	1.0000	88		1	SW	

Most of the changes to shorten the decay chains were based on possible impacts to the Case 2 test results. All of the radionuclides in the RMDLIB were run as input to test Cases 1 and 2, and the computed values were compared with previous GENII results for the new RMDLIB. All of the Case 1 tests gave identical answers. Differences for the Case 2 test are shown below. Percent differences less than 5% and values less than 1.0E-20 rem are not shown.

Comparison of Dose Results: New RMDLIB versus Smaller RMDLIB
(How much the dose would increase using the Long Decay Time library)

Percent Increase for Case 2: Air Transport 16000 meters (farmer)

Class D	Inhale	Ingest	Extern	Total	Organ	Season
Te-129		900.0				Winter
Te-129		5.8E+03				Spring
Te-129		1.5E+04				Summer
Te-129		1.3E+05				Autumn
Class W	**Inhale**	**Ingest**	**Extern**	**Total**	**Organ**	**Season**
Te-129		900.0				Winter
Te-129		5.8E+03				Spring
Te-129		1.5E+04				Summer
Te-129		1.3E+05				Autumn
Th-231	4.3	996.8		4.3	13.4	Winter
Th-231	4.3	6.7				Spring
Th-231	4.3	33.3		4.0	9.1	Summer
Th-231	4.3	184.2		16.0	81.8	Autumn
Class Y	**Inhale**	**Ingest**	**Extern**	**Total**	**Organ**	**Season**
Th-231		996.8		4.3		Winter
Th-231		6.7				Spring
Th-231		33.3		4.0		Summer
Th-231		184.2		16.0		Autumn

The increase in the ingestion doses from Te-129 are due to ingrowth of I-129. Note that the dramatic increase in ingestion pathway dose does not change the total EDE computed by GENII. The increase for Th-231 is due to the ingrowth of Pa-231. Normally, Th-231 with its 1.06 day halflife would not be found apart from its parent nuclide, U-235. Doses from U-235 are much larger than those from Th-231, so the small increase in Th-231 doses are not likely to be important.

6.0 REFERENCES

Kennedy, W. E., and D. L. Strenge, *Residual Radioactive Contamination from Decommissioning*, Volume 1, (NUREG/CR-5512), Pacific Northwest Laboratory, October 1992.

Kocher, D. C., *Radioactive Decay Data Tables*, (DOE/TIC-11026), U.S. Government Printing Office, 1981.

Napier, B. A., et al., *GENII - The Hanford Environmental Radiation Dosimetry Software System*, (PNL-6584), Pacific Northwest Laboratory, December 1988.

Case 1: Air Transport 100 meters for Acute Release -- GENII Input File

```
######################## Program GENII Input File ############  8 Jul 88 ####
Title: 100 m - Acute
       \RMD\AIR1.IN                                  Created on 08-10-1992 at 07:30
OPTIONS=========================== Default ==========================================
F    Near-field scenario?      (Far-field)    NEAR-FIELD: narrowly-focused
F    Population dose?         (Individual)                release, single site
T    Acute release?             (Chronic)     FAR-FIELD:  wide-scale release,
     Maximum Individual data set used                     multiple sites
                                Complete                                  Complete
TRANSPORT OPTIONS============== Section   EXPOSURE PATHWAY OPTIONS====== Section
T  Air Transport                  1       F  Finite plume, external        5
F  Surface Water Transport        2       T  Infinite plume, external      5
F  Biotic Transport (near-field)  3,4     F  Ground, external              5
F  Waste Form Degradation (near)  3,4     F  Recreation, external          5
                                          T  Inhalation uptake             5,6
REPORT OPTIONS=========================   F  Drinking water ingestion      7,8
T  Report AEDE only                       F  Aquatic foods ingestion       7,8
F  Report by radionuclide                 F  Terrestrial foods ingestion   7,9
F  Report by exposure pathway             F  Animal product ingestion      7,10
F  Debug report on screen                 F  Inadvertent soil ingestion

INVENTORY ##################################################################

 4   Inventory input activity units: (1-pCi  2-uCi  3-mCi  4-Ci  5-Bq)
 0   Surface soil source units (1- m2  2- m3  3- kg)
     Equilibrium question goes here

     --------|----Release Terms------|----------Basic Concentrations---------|
     Use when|  transport selected   |  near-field scenario, optionally      |
     --------|-----------------------|---------------------------------------|
     Release |        Surface Buried |        Surface Deep    Ground  Surface|
     Radio-  |Air     Water   Waste  |Air     Soil    Soil    Water   Water  |
     nuclide |/yr     /yr     /m3    |/m3     /unit   /m3     /L      /L     |
     --------|-------- -------- -------|-------- -------- -------- -------- -------|
     H 3     1.0E+00

     --------|----Derived Concentrations-----|
     Use when|   measured values are known   |
     --------|-------------------------------|
     Release |Terres. Animal  Drink   Aquatic|
     Radio-  |Plant   Product Water   Food   |
     nuclide |/kg     /kg     /L      /kg    |
     --------|-------- -------- -------- --------|

TIME ########################################################################

1    Intake ends after (yr)
50   Dose calc. ends after (yr)
0    Release ends after (yr)
0    No. of years of air deposition prior to the intake period
0    No. of years of irrigation water deposition prior to the intake period

FAR-FIELD SCENARIOS (IF POPULATION DOSE) ####################################

0          Definition option: 1-Use population grid in file POP.IN
0                             2-Use total entered on this line

NEAR-FIELD SCENARIOS ########################################################

           Prior to the beginning of the intake period: (yr)
0            When was the inventory disposed?  (Package degradation starts)
0            When was LOIC?  (Biotic transport starts)
0          Fraction of roots in upper soil (top 15 cm)
0          Fraction of roots in deep soil
0          Manual redistribution: deep soil/surface soil dilution factor
0          Source area for external dose modification factor (m2)
```

```
TRANSPORT ##################################################################
          ====AIR TRANSPORT=====================================SECTION 1=====
                   0-Calculate PM                |0        Release type (0-3)
3         Option: 1-Use chi/Q or PM value        |F        Stack release (T/F)
                   2-Select MI dist & dir        |0        Stack height (m)
                   3-Specify MI dist & dir       |0        Stack flow (m3/sec)
1.0       Chi/Q                                  |0        Stack radius (m)
9         This space for comment.                |0        Effluent temp. (C)
100.0                                            |0        Building x-section (m2)
T         Use JF data                            |0        Building height (m)

          ====SURFACE WATER TRANSPORT===========================SECTION 2=====
0         Mixing ratio model: 0-use value, 1-river, 2-lake
0         Mixing ratio, dimensionless
0         Average river flow rate for: MIXFLG=0 (m3/s), MIXFLG=1,2 (m/s),
0         Transit time to irrigation withdrawl location (hr)
          If mixing ratio model > 0:—
0           Rate of effluent discharge to receiving water body (m3/s)
0           Longshore distance from release point to usage location (m)
0           Offshore distance to the water intake (m)
0           Average water depth in surface water body (m)
0           Average river width (m), MIXFLG=1 only
0           Depth of effluent discharge point to surface water (m), lake only

          ====WASTE FORM AVAILABILITY===========================SECTION 3=====
0         Waste form/package half life, (yr)
0         Waste thickness, (m)
0         Depth of soil overburden, m

          ====BIOTIC TRANSPORT OF BURIED SOURCE================SECTION 4=====
T         Consider during inventory decay/buildup period (T/F)?
T         Consider during intake period (T/F)?    | 1-Arid non agricultural
0         Pre-Intake site condition...............| 2-Humid non agricultural
                                                  | 3-Agricultural

EXPOSURE ###################################################################

          ====EXTERNAL EXPOSURE=================================SECTION 5=====
          Exposure time:                  |  Residential irrigation:
0           Plume (hr)                    | T        Consider: (T/F)
4380.0      Soil contamination (hr)       | 0        Source: 1-ground water
0           Swimming (hr)                 |                  2-surface water
0           Boating (hr)                  | 0        Application rate (in/yr)
0           Shoreline activities (hr)     | 0        Duration (mo/yr)
0         Shoreline type: (1-river, 2-lake, 3-ocean, 4-tidal basin)
0         Transit time for release to reach aquatic recreation (hr)
1.0       Average fraction of time submersed in acute cloud (hr/person hr)

          ====INHALATION========================================SECTION 6=====
8766.0    Hours of exposure to contamination per year
0         0-No resus-  1-Use Mass Loading          2-Use Anspaugh model
0           pension      Mass loading factor (g/m3)   Top soil available (cm)

          ====INGESTION POPULATION==============================SECTION 7=====
 1        Atmospheric production definition (select option):
0           0-Use food-weighted chi/Q, (food-sec/m3), enter value on this line
            1-Use population-weighted chi/Q
            2-Use uniform production
            3-Use chi/Q and production grids (PRODUCTION will be overridden)
0         Population ingesting aquatic foods, 0 defaults to total (person)
0         Population ingesting drinking water, 0 defaults to total (person)
F         Consider dose from food exported out of region (default=F)
```

Note below: S* or Source: 0-none, 1-ground water, 2-surface water
3-Derived concentration entered above

==== AQUATIC FOODS / DRINKING WATER INGESTION==========SECTION 8====

F Salt water? (default is fresh)

USE ? T/F	FOOD TYPE	TRAN-SIT hr	PROD-UCTION kg/yr	-CONSUMPTION- HOLDUP da	RATE kg/yr
F	FISH	0.00	0.0E+00	0.00	0.0
F	MOLLUS	0.00	0.0E+00	0.00	0.0
F	CRUSTA	0.00	0.0E+00	0.00	0.0
F	PLANTS	0.00	0.0E+00	0.00	0.0

DRINKING WATER	
0	Source (see above)
T	Treatment? T/F
0	Holdup/transit(da)
0	Consumption (L/yr)

====TERRESTRIAL FOOD INGESTION==========SECTION 9=====

USE ? T/F	FOOD TYPE	GROW TIME da	--IRRIGATION-- S *	RATE in/yr	TIME mo/yr	YIELD kg/m2	PROD-UCTION kg/yr	--CONSUMPTION-- HOLDUP da	RATE kg/yr
T	LEAF V	90.00	0	0.0	0.0	1.5	0.0E+00	1.0	30.0
T	ROOT V	90.00	0	0.0	0.0	4.0	0.0E+00	5.0	220.0
T	FRUIT	90.00	0	0.0	0.0	2.0	0.0E+00	5.0	330.0
T	GRAIN	90.00	0	0.0	0.0	0.8	0.0E+00	180.0	80.0

====ANIMAL PRODUCTION CONSUMPTION==========SECTION 10====

USE ? T/F	FOOD TYPE	---HUMAN---- CONSUMPTION RATE kg/yr	HOLDUP da	TOTAL PROD-UCTION kg/yr	DRINK WATER CONTAM FRACT.	----------STORED FEED---------- DIET FRAC-TION	GROW TIME da	-IRRIGATION-- S *	RATE in/yr	TIME mo/yr	YIELD kg/m3	STOR-AGE da
T	BEEF	80.0	15.0	0.00	0.00	0.25	90.0	0	0.0	0.00	0.80	0.0
T	POULTR	18.0	1.0	0.00	0.00	1.00	90.0	0	0.0	0.00	0.80	0.0
T	MILK	270.0	1.0	0.00	0.00	0.25	45.0	0	0.0	0.00	2.00	0.0
T	EGG	30.0	1.0	0.00	0.00	1.00	90.0	0	0.0	0.00	0.80	0.0
						----------FRESH FORAGE----------						
	BEEF					0.75	45.0	0	0.0	0.00	2.00	100.0
	MILK					0.75	30.0	0	0.0	0.00	1.50	0.0

Case 2: Air Transport 16000 meters for Acute Release -- GENII Input File

```
######################## Program GENII Input File ############  8 Jul 88 ####
Title: 16 km - Acute
       \RMD\AIR2.IN                                  Created on 08-10-1992 at 07:30
OPTIONS========================== Default ==========================================
F    Near-field scenario?       (Far-field)    NEAR-FIELD: narrowly-focused
F    Population dose?          (Individual)                release, single site
T    Acute release?              (Chronic)     FAR-FIELD:  wide-scale release,
     Maximum Individual data set used                      multiple sites
                                 Complete                                Complete
TRANSPORT OPTIONS============ Section   EXPOSURE PATHWAY OPTIONS===== Section
T  Air Transport                  1     F  Finite plume, external        5
F  Surface Water Transport        2     T  Infinite plume, external      5
F  Biotic Transport (near-field)  3,4   T  Ground, external              5
F  Waste Form Degradation (near)  3,4   F  Recreation, external          5
                                        T  Inhalation uptake             5,6
REPORT OPTIONS======================    F  Drinking water ingestion      7,8
T  Report AEDE only                     F  Aquatic foods ingestion       7,8
F  Report by radionuclide               T  Terrestrial foods ingestion   7,9
F  Report by exposure pathway           T  Animal product ingestion      7,10
F  Debug report on screen               T  Inadvertent soil ingestion

INVENTORY ##################################################################

 4   Inventory input activity units: (1-pCi  2-uCi  3-mCi  4-Ci  5-Bq)
 0   Surface soil source units (1- m2  2- m3  3- kg)
     Equilibrium question goes here

     --------|----Release Terms------|----------Basic Concentrations---------|
     Use when|  transport selected   |  near-field scenario, optionally      |
     --------|-----------------------|---------------------------------------|
     Release |        Surface Buried |        Surface Deep    Ground  Surface|
     Radio-  |Air     Water   Waste  |Air     Soil    Soil    Water   Water  |
     nuclide |/yr     /yr     /m3    |/m3     /unit   /m3     /L      /L     |
     --------|------- ------- -------|------- ------- ------- ------- -------|
     H 3     |1.0E+00

     --------|----Derived Concentrations-----|
     Use when|   measured values are known   |
     --------|-------------------------------|
     Release |Terres. Animal  Drink   Aquatic|
     Radio-  |Plant   Product Water   Food   |
     nuclide |/kg     /kg     /L      /kg    |
     --------|------- ------- ------- -------|

TIME #######################################################################

1    Intake ends after (yr)
50   Dose calc. ends after (yr)
0    Release ends after (yr)
0    No. of years of air deposition prior to the intake period
0    No. of years of irrigation water deposition prior to the intake period

FAR-FIELD SCENARIOS (IF POPULATION DOSE) ###################################

0          Definition option: 1-Use population grid in file POP.IN
0                             2-Use total entered on this line

NEAR-FIELD SCENARIOS #######################################################

           Prior to the beginning of the intake period: (yr)
0            When was the inventory disposed?  (Package degradation starts)
0            When was LOIC?  (Biotic transport starts)
0          Fraction of roots in upper soil (top 15 cm)
0          Fraction of roots in deep soil
0          Manual redistribution: deep soil/surface soil dilution factor
0          Source area for external dose modification factor (m2)
```

```
TRANSPORT ##################################################################
          ====AIR TRANSPORT=========================================SECTION 1=====
                  0-Calculate PM                  |0        Release type (0-3)
3         Option: 1-Use chi/Q or PM value         |F        Stack release (T/F)
                  2-Select MI dist & dir          |0        Stack height (m)
                  3-Specify MI dist & dir         |0        Stack flow (m3/sec)
1.0       Chi/Q                                   |0        Stack radius (m)
13        This space for comment.                 |0        Effluent temp. (C)
16000.0                                           |0        Building x-section (m2)
T         Use JF data                             |0        Building height (m)

          ====SURFACE WATER TRANSPORT===========================SECTION 2=====
0         Mixing ratio model: 0-use value, 1-river, 2-lake
0         Mixing ratio, dimensionless
0         Average river flow rate for: MIXFLG=0 (m3/s), MIXFLG=1,2 (m/s),
0         Transit time to irrigation withdrawl location (hr)
          If mixing ratio model > 0:
0           Rate of effluent discharge to receiving water body (m3/s)
0           Longshore distance from release point to usage location (m)
0           Offshore distance to the water intake (m)
0           Average water depth in surface water body (m)
0           Average river width (m), MIXFLG=1 only
0           Depth of effluent discharge point to surface water (m), lake only

          ====WASTE FORM AVAILABILITY===========================SECTION 3=====
0         Waste form/package half life, (yr)
0         Waste thickness, (m)
0         Depth of soil overburden, m

          ====BIOTIC TRANSPORT OF BURIED SOURCE================SECTION 4=====
T         Consider during inventory decay/buildup period (T/F)?
T         Consider during intake period (T/F)?    | 1-Arid non agricultural
0         Pre-Intake site condition...............| 2-Humid non agricultural
                                                  | 3-Agricultural

EXPOSURE ###################################################################

          ====EXTERNAL EXPOSURE=================================SECTION 5=====
          Exposure time:                  |  Residential irrigation:
0           Plume (hr)                    | T        Consider: (T/F)
4380.0      Soil contamination (hr)       | 0        Source: 1-ground water
0           Swimming (hr)                 |                  2-surface water
0           Boating (hr)                  | 0        Application rate (in/yr)
0           Shoreline activities (hr)     | 0        Duration (mo/yr)
0         Shoreline type: (1-river, 2-lake, 3-ocean, 4-tidal basin)
0         Transit time for release to reach aquatic recreation (hr)
1.0       Average fraction of time submersed in acute cloud (hr/person hr)

          ====INHALATION========================================SECTION 6=====
8766.0    Hours of exposure to contamination per year
0         0-No resus-  1-Use Mass Loading          2-Use Anspaugh model
0           pension      Mass loading factor (g/m3)   Top soil available (cm)

          ====INGESTION POPULATION==============================SECTION 7=====
 1        Atmospheric production definition (select option):
0           0-Use food-weighted chi/Q, (food-sec/m3), enter value on this line
            1-Use population-weighted chi/Q
            2-Use uniform production
            3-Use chi/Q and production grids (PRODUCTION will be overridden)
0         Population ingesting aquatic foods, 0 defaults to total (person)
0         Population ingesting drinking water, 0 defaults to total (person)
F         Consider dose from food exported out of region (default=F)
```

Note below: S* or Source: 0-none, 1-ground water, 2-surface water
3-Derived concentration entered above

==== AQUATIC FOODS / DRINKING WATER INGESTION=========SECTION 8====

F Salt water? (default is fresh)

USE ? T/F	FOOD TYPE	TRAN-SIT hr	PROD-UCTION kg/yr	-CONSUMPTION- HOLDUP da	RATE kg/yr	DRINKING WATER	
F	FISH	0.00	0.0E+00	0.00	0.0	0	Source (see above)
F	MOLLUS	0.00	0.0E+00	0.00	0.0	T	Treatment? T/F
F	CRUSTA	0.00	0.0E+00	0.00	0.0	0	Holdup/transit(da)
F	PLANTS	0.00	0.0E+00	0.00	0.0	0	Consumption (L/yr)

====TERRESTRIAL FOOD INGESTION=========================SECTION 9=====

USE ? T/F	FOOD TYPE	GROW TIME da	S *	--IRRIGATION-- RATE in/yr	TIME mo/yr	YIELD kg/m2	PROD-UCTION kg/yr	--CONSUMPTION-- HOLDUP da	RATE kg/yr
T	LEAF V	90.00	0	0.0	0.0	1.5	0.0E+00	1.0	30.0
T	ROOT V	90.00	0	0.0	0.0	4.0	0.0E+00	5.0	220.0
T	FRUIT	90.00	0	0.0	0.0	2.0	0.0E+00	5.0	330.0
T	GRAIN	90.00	0	0.0	0.0	0.8	0.0E+00	180.0	80.0

====ANIMAL PRODUCTION CONSUMPTION=====================SECTION 10====

USE ? T/F	FOOD TYPE	---HUMAN---- CONSUMPTION RATE kg/yr	HOLDUP da	TOTAL PROD-UCTION kg/yr	DRINK WATER CONTAM FRACT.	----------STORED FEED---------- DIET FRAC-TION	GROW TIME da	S *	-IRRIGATION-- RATE in/yr	TIME mo/yr	YIELD kg/m3	STOR-AGE da
T	BEEF	80.0	15.0	0.00	0.00	0.25	90.0	0	0.0	0.00	0.80	0.0
T	POULTR	18.0	1.0	0.00	0.00	1.00	90.0	0	0.0	0.00	0.80	0.0
T	MILK	270.0	1.0	0.00	0.00	0.25	45.0	0	0.0	0.00	2.00	0.0
T	EGG	30.0	1.0	0.00	0.00	1.00	90.0	0	0.0	0.00	0.80	0.0
						----------FRESH FORAGE----------						
	BEEF					0.75	45.0	0	0.0	0.00	2.00	100.0
	MILK					0.75	30.0	0	0.0	0.00	1.50	0.0

##

Case 3: Intruder Scenario after 100 years -- GENII Input File

```
######################## Program GENII Input File ############  8 Jul 88 ####
Title: Post-Excavation Scenario -- 100 years
       \EXCAVATE.IN                                Created on 07-14-1992 at 16:25
OPTIONS======================== Default ==========================================
T    Near-field scenario?       (Far-field)    NEAR-FIELD: narrowly-focused
F    Population dose?          (Individual)                release, single site
F    Acute release?             (Chronic)     FAR-FIELD:  wide-scale release,
     Maximum individual data set used                      multiple sites
                                Complete                                  Complete
TRANSPORT OPTIONS============ Section   EXPOSURE PATHWAY OPTIONS===== Section
F  Air Transport                 1      F  Finite plume, external        5
F  Surface Water Transport       2      F  Infinite plume, external      5
F  Biotic Transport (near-field) 3,4    T  Ground, external              5
F  Waste Form Degradation (near) 3,4    F  Recreation, external          5
                                        T  Inhalation uptake             5,6
REPORT OPTIONS======================    F  Drinking water ingestion      7,8
T  Report AEDE only                     F  Aquatic foods ingestion       7,8
F  Report by radionuclide               T  Terrestrial foods ingestion   7,9
T  Report by exposure pathway           F  Animal product ingestion      7,10
F  Debug report on screen               F  Inadvertent soil ingestion

INVENTORY ##################################################################

 4   Inventory input activity units: (1-pCi  2-uCi  3-mCi  4-Ci  5-Bq)
 2   Surface soil source units (1- m2  2- m3  3- kg)
     Equilibrium question goes here

     --------|----Release Terms------|----------Basic Concentrations---------|
     Use when|  transport selected   |  near-field scenario, optionally      |
     --------|-----------------------|---------------------------------------|
     Release |        Surface Buried |        Surface Deep    Ground  Surface|
     Radio-  |Air     Water   Waste  |Air     Soil    Soil    Water   Water  |
     nuclide |/yr     /yr     /m3    |/m3     /unit   /m3     /L      /L     |
     --------|------- ------- -------|------- ------- ------- ------- -------|
     NI59                                                   1.0E+00

     --------|----Derived Concentrations-----|
     Use when|   measured values are known   |
     --------|-------------------------------|
     Release |Terres. Animal  Drink   Aquatic|
     Radio-  |Plant   Product Water   Food   |
     nuclide |/kg     /kg     /L      /kg    |
     --------|------- ------- ------- -------|

TIME #######################################################################

1    Intake ends after (yr)
50   Dose calc. ends after (yr)
0    Release ends after (yr)
0    No. of years of air deposition prior to the intake period
0    No. of years of irrigation water deposition prior to the intake period

FAR-FIELD SCENARIOS (IF POPULATION DOSE) ###################################

0          Definition option: 1-Use population grid in file POP.IN
0                             2-Use total entered on this line

NEAR-FIELD SCENARIOS #######################################################

           Prior to the beginning of the intake period: (yr)
100          When was the inventory disposed?  (Package degradation starts)
0            When was LOIC?  (Biotic transport starts)
1.0        Fraction of roots in upper soil (top 15 cm)
0          Fraction of roots in deep soil
0.030      Manual redistribution: deep soil/surface soil dilution factor
1250       Source area for external dose modification factor (m2)
```

```
TRANSPORT ##################################################################
          ====AIR TRANSPORT=================================SECTION 1=====
                 0-Calculate PM              |0        Release type (0-3)
 1        Option: 1-Use chi/Q or PM value    |F        Stack release (T/F)
                 2-Select MI dist & dir      |0        Stack height (m)
                 3-Specify MI dist & dir     |0        Stack flow (m3/sec)
 0        Chi/Q or PM value                  |0        Stack radius (m)
 0        MI sector index (1=S)              |0        Effluent temp. (C)
 0        MI distance from release point (m) |0        Building x-section (m2)
 T        Use jf data, (T/F) else chi/Q grid |0        Building height (m)

          ====SURFACE WATER TRANSPORT=========================SECTION 2=====
 0        Mixing ratio model: 0-use value, 1-river, 2-lake
 0        Mixing ratio, dimensionless
 0        Average river flow rate for: MIXFLG=0 (m3/s), MIXFLG=1,2 (m/s),
 0        Transit time to irrigation withdrawl location (hr)
          If mixing ratio model > 0:
 0          Rate of effluent discharge to receiving water body (m3/s)
 0          Longshore distance from release point to usage location (m)
 0          Offshore distance to the water intake (m)
 0          Average water depth in surface water body (m)
 0          Average river width (m), MIXFLG=1 only
 0          Depth of effluent discharge point to surface water (m), lake only

          ====WASTE FORM AVAILABILITY=========================SECTION 3=====
 0        Waste form/package half life, (yr)
 5.0      Waste thickness, (m)
 5.0      Depth of soil overburden, m

          ====BIOTIC TRANSPORT OF BURIED SOURCE===============SECTION 4=====
 T        Consider during inventory decay/buildup period (T/F)?
 T        Consider during intake period (T/F)?   | 1-Arid non agricultural
 0        Pre-Intake site condition..............| 2-Humid non agricultural
                                                 | 3-Agricultural

EXPOSURE ###################################################################

          ====EXTERNAL EXPOSURE===============================SECTION 5=====
          Exposure time:                  |  Residential irrigation:
 0          Plume (hr)                    | T        Consider: (T/F)
 3260.0     Soil contamination (hr)       | 0        Source: 1-ground water
 0          Swimming (hr)                 |                  2-surface water
 0          Boating (hr)                  | 0        Application rate (in/yr)
 0          Shoreline activities (hr)     | 0        Duration (mo/yr)
 0        Shoreline type: (1-river, 2-lake, 3-ocean, 4-tidal basin)
 0        Transit time for release to reach aquatic recreation (hr)
 0        Average fraction of time submersed in acute cloud (hr/person hr)

          ====INHALATION======================================SECTION 6=====
 4680.0   Hours of exposure to contamination per year
 1        0-No resus-  1-Use Mass Loading          2-Use Anspaugh model
 0.0001     pension      Mass loading factor (g/m3)   Top soil available (cm)

          ====INGESTION POPULATION============================SECTION 7=====
 0        Atmospheric production definition (select option):
 0          0-Use food-weighted chi/Q, (food-sec/m3), enter value on this line
            1-Use population-weighted chi/Q
            2-Use uniform production
            3-Use chi/Q and production grids (PRODUCTION will be overridden)
 0        Population ingesting aquatic foods, 0 defaults to total (person)
 0        Population ingesting drinking water, 0 defaults to total (person)
 F        Consider dose from food exported out of region (default=F)
```

Note below: S* or Source: 0-none, 1-ground water, 2-surface water
3-Derived concentration entered above
==== AQUATIC FOODS / DRINKING WATER INGESTION=========SECTION 8====

F Salt water? (default is fresh)

USE ? T/F	FOOD TYPE	TRAN-SIT hr	PROD-UCTION kg/yr	-CONSUMPTION- HOLDUP da	RATE kg/yr	DRINKING WATER	
F	FISH	0.00	0.0E+00	0.00	0.0	0	Source (see above)
F	MOLLUS	0.00	0.0E+00	0.00	0.0	T	Treatment? T/F
F	CRUSTA	0.00	0.0E+00	0.00	0.0	0	Holdup/transit(da)
F	PLANTS	0.00	0.0E+00	0.00	0.0	0	Consumption (L/yr)

====TERRESTRIAL FOOD INGESTION=====================SECTION 9=====

USE ? T/F	FOOD TYPE	GROW TIME da	--IRRIGATION-- S *	RATE in/yr	TIME mo/yr	YIELD kg/m2	PROD-UCTION kg/yr	--CONSUMPTION-- HOLDUP da	RATE kg/yr
T	LEAF V	90.00	0	0.0	0.0	1.5	0.0E+00	1.0	3.8
T	ROOT V	90.00	0	0.0	0.0	4.0	0.0E+00	5.0	35.0
T	FRUIT	90.00	0	0.0	0.0	2.0	0.0E+00	5.0	16.0
T	GRAIN	90.00	0	0.0	0.0	0.8	0.0E+00	180.0	18.0

====ANIMAL PRODUCTION CONSUMPTION==================SECTION 10====

USE ? T/F	FOOD TYPE	---HUMAN---- CONSUMPTION RATE kg/yr	HOLDUP da	TOTAL PROD-UCTION kg/yr	DRINK WATER CONTAM FRACT.	DIET FRAC-TION	GROW TIME da	S *	-IRRIGATION-- RATE in/yr	TIME mo/yr	YIELD kg/m3	STOR-AGE da
						----STORED FEED----						
F	BEEF	0.0	0.0	0.00	0.00	0.00	0.0	0	0.0	0.00	0.00	0.0
F	POULTR	0.0	0.0	0.00	0.00	0.00	0.0	0	0.0	0.00	0.00	0.0
F	MILK	0.0	0.0	0.00	0.00	0.00	0.0	0	0.0	0.00	0.00	0.0
F	EGG	0.0	0.0	0.00	0.00	0.00	0.0	0	0.0	0.00	0.00	0.0
						----FRESH FORAGE----						
	BEEF					0.00	0.0	0	0.0	0.00	0.00	0.0
	MILK					0.00	0.0	0	0.0	0.00	0.00	0.0

##

Case 4: Intruder Scenario after 1000 years -- GENII Input File

```
######################## Program GENII Input File ############  8 Jul 88 ####
Title: Post-Excavation Scenario -- 1000 years
       \EXCAVATE.IN                                  Created on 07-14-1992 at 16:25
OPTIONS========================= Default ==================================
T    Near-field scenario?      (Far-field)    NEAR-FIELD: narrowly-focused
F    Population dose?         (Individual)                release, single site
F    Acute release?             (Chronic)     FAR-FIELD:  wide-scale release,
     Maximum Individual data set used                     multiple sites
                                Complete                                Complete
TRANSPORT OPTIONS============ Section   EXPOSURE PATHWAY OPTIONS===== Section
F  Air Transport                 1      F  Finite plume, external        5
F  Surface Water Transport       2      F  Infinite plume, external      5
F  Biotic Transport (near-field) 3,4    T  Ground, external              5
F  Waste Form Degradation (near) 3,4    F  Recreation, external          5
                                        T  Inhalation uptake             5,6
REPORT OPTIONS======================    F  Drinking water ingestion      7,8
T  Report AEDE only                     F  Aquatic foods ingestion       7,8
F  Report by radionuclide               T  Terrestrial foods ingestion   7,9
T  Report by exposure pathway           F  Animal product ingestion      7,10
F  Debug report on screen               F  Inadvertent soil ingestion

INVENTORY ##################################################################

 4   Inventory input activity units: (1-pCi  2-uCi  3-mCi  4-Ci  5-Bq)
 2   Surface soil source units (1- m2  2- m3  3- kg)
     Equilibrium question goes here

     --------|----Release Terms------|----------Basic Concentrations---------|
     Use when|  transport selected   |  near-field scenario, optionally      |
     --------|-----------------------|---------------------------------------|
     Release |        Surface Buried |        Surface Deep    Ground  Surface|
     Radio-  |Air     Water   Waste  |Air     Soil    Soil    Water   Water  |
     nuclide |/yr     /yr     /m3    |/m3     /unit   /m3     /L      /L     |
     --------|------- ------- -------|------- ------- ------- ------- -------|
     NI59                                                   1.0E+00

     --------|----Derived Concentrations-----|
     Use when|   measured values are known   |
     --------|-------------------------------|
     Release |Terres. Animal  Drink   Aquatic|
     Radio-  |Plant   Product Water   Food   |
     nuclide |/kg     /kg     /L      /kg    |
     --------|------- ------- ------- -------|

TIME #######################################################################

1    Intake ends after (yr)
50   Dose calc. ends after (yr)
0    Release ends after (yr)
0    No. of years of air deposition prior to the intake period
0    No. of years of irrigation water deposition prior to the intake period

FAR-FIELD SCENARIOS (IF POPULATION DOSE) ###################################

0          Definition option: 1-Use population grid in file POP.IN
0                             2-Use total entered on this line

NEAR-FIELD SCENARIOS #######################################################

           Prior to the beginning of the intake period: (yr)
1000         When was the inventory disposed?  (Package degradation starts)
0            When was LOIC?  (Biotic transport starts)
1.0        Fraction of roots in upper soil (top 15 cm)
0          Fraction of roots in deep soil
0.030      Manual redistribution: deep soil/surface soil dilution factor
1250       Source area for external dose modification factor (m2)
```

```
TRANSPORT ##################################################################
          ====AIR TRANSPORT=================================SECTION 1=====
                  0-Calculate PM              |0        Release type (0-3)
 1        Option: 1-Use chi/Q or PM value     |F        Stack release (T/F)
                  2-Select MI dist & dir      |0        Stack height (m)
                  3-Specify MI dist & dir     |0        Stack flow (m3/sec)
 0        Chi/Q or PM value                   |0        Stack radius (m)
 0        MI sector index (1=S)               |0        Effluent temp. (C)
 0        MI distance from release point (m)  |0        Building x-section (m2)
 T        Use jf data, (T/F) else chi/Q grid  |0        Building height (m)

          ====SURFACE WATER TRANSPORT=======================SECTION 2=====
 0        Mixing ratio model: 0-use value, 1-river, 2-lake
 0        Mixing ratio, dimensionless
 0        Average river flow rate for: MIXFLG=0 (m3/s), MIXFLG=1,2 (m/s),
 0        Transit time to irrigation withdrawl location (hr)
          If mixing ratio model > 0:
 0          Rate of effluent discharge to receiving water body (m3/s)
 0          Longshore distance from release point to usage location (m)
 0          Offshore distance to the water intake (m)
 0          Average water depth in surface water body (m)
 0          Average river width (m), MIXFLG=1 only
 0          Depth of effluent discharge point to surface water (m), lake only

          ====WASTE FORM AVAILABILITY=======================SECTION 3=====
 0        Waste form/package half life, (yr)
 5.0      Waste thickness, (m)
 5.0      Depth of soil overburden, m

          ====BIOTIC TRANSPORT OF BURIED SOURCE=============SECTION 4=====
 T        Consider during inventory decay/buildup period (T/F)?
 T        Consider during intake period (T/F)?   | 1-Arid non agricultural
 0        Pre-Intake site condition..............| 2-Humid non agricultural
                                                 | 3-Agricultural

EXPOSURE ###################################################################

          ====EXTERNAL EXPOSURE=============================SECTION 5=====
          Exposure time:                 |  Residential irrigation:
 0          Plume (hr)                   | T       Consider: (T/F)
 3260.0     Soil contamination (hr)      | 0       Source: 1-ground water
 0          Swimming (hr)                |                 2-surface water
 0          Boating (hr)                 | 0       Application rate (in/yr)
 0          Shoreline activities (hr)    | 0       Duration (mo/yr)
 0        Shoreline type: (1-river, 2-lake, 3-ocean, 4-tidal basin)
 0        Transit time for release to reach aquatic recreation (hr)
 0        Average fraction of time submersed in acute cloud (hr/person hr)

          ====INHALATION====================================SECTION 6=====
 4680.0   Hours of exposure to contamination per year
 1        0-No resus-  1-Use Mass Loading          2-Use Anspaugh model
 0.0001     pension      Mass loading factor (g/m3)   Top soil available (cm)

          ====INGESTION POPULATION==========================SECTION 7=====
 0        Atmospheric production definition (select option):
 0          0-Use food-weighted chi/Q, (food-sec/m3), enter value on this line
            1-Use population-weighted chi/Q
            2-Use uniform production
            3-Use chi/Q and production grids (PRODUCTION will be overridden)
 0        Population ingesting aquatic foods, 0 defaults to total (person)
 0        Population ingesting drinking water, 0 defaults to total (person)
 F        Consider dose from food exported out of region (default=F)
```

Note below: S* or Source: 0-none, 1-ground water, 2-surface water
3-Derived concentration entered above

==== AQUATIC FOODS / DRINKING WATER INGESTION==========SECTION 8====

F Salt water? (default is fresh)

USE ? T/F	FOOD TYPE	TRAN-SIT hr	PROD-UCTION kg/yr	-CONSUMPTION- HOLDUP da	RATE kg/yr	DRINKING WATER	
F	FISH	0.00	0.0E+00	0.00	0.0	0	Source (see above)
F	MOLLUS	0.00	0.0E+00	0.00	0.0	T	Treatment? T/F
F	CRUSTA	0.00	0.0E+00	0.00	0.0	0	Holdup/transit(da)
F	PLANTS	0.00	0.0E+00	0.00	0.0	0	Consumption (L/yr)

====TERRESTRIAL FOOD INGESTION==========SECTION 9=====

USE ? T/F	FOOD TYPE	GROW TIME da	--IRRIGATION-- S *	RATE in/yr	TIME mo/yr	YIELD kg/m2	PROD-UCTION kg/yr	--CONSUMPTION-- HOLDUP da	RATE kg/yr
T	LEAF V	90.00	0	0.0	0.0	1.5	0.0E+00	1.0	3.8
T	ROOT V	90.00	0	0.0	0.0	4.0	0.0E+00	5.0	35.0
T	FRUIT	90.00	0	0.0	0.0	2.0	0.0E+00	5.0	16.0
T	GRAIN	90.00	0	0.0	0.0	0.8	0.0E+00	180.0	18.0

====ANIMAL PRODUCTION CONSUMPTION==========SECTION 10====

USE ? T/F	FOOD TYPE	---HUMAN---- CONSUMPTION RATE kg/yr	HOLDUP da	TOTAL PROD-UCTION kg/yr	DRINK WATER CONTAM FRACT.	----------STORED FEED---------- DIET FRAC-TION	GROW TIME da	-IRRIGATION-- S *	RATE in/yr	TIME mo/yr	YIELD kg/m3	STOR-AGE da
F	BEEF	0.0	0.0	0.00	0.00	0.00	0.0	0	0.0	0.00	0.00	0.0
F	POULTR	0.0	0.0	0.00	0.00	0.00	0.0	0	0.0	0.00	0.00	0.0
F	MILK	0.0	0.0	0.00	0.00	0.00	0.0	0	0.0	0.00	0.00	0.0
F	EGG	0.0	0.0	0.00	0.00	0.00	0.0	0	0.0	0.00	0.00	0.0
						----------FRESH FORAGE----------						
	BEEF					0.00	0.0	0	0.0	0.00	0.00	0.0
	MILK					0.00	0.0	0	0.0	0.00	0.00	0.0

##

New FTRANS.DAT, with Francium and Osmium Values:

PNL Food Transfer Factor Library (by Z, with Fr&Os 7/19/93 PDR)

Element	Dep Vel m/sec	Leafy Veg	Root Veg	Fruit --	Grain --	Beef day/kg	Poulty day/kg	Milk day/L	Egg day/kg	Leaching Factor	Z
H	0.0	0.0	0.0	0.0	0.0	0.0	0.0	0.0	0.0	0.8	1
BE	1.0E-3	8.0E-3	8.0E-3	8.0E-3	3.3E-3	8.0E-4	4.0E-1	2.0E-6	2.0E-2	1.9E-4	4
C	0.0	0.0	0.0	0.0	0.0	0.0	0.0	0.0	0.0	0.8	6
N	1.0E-3	7.5	7.5	7.5	7.5	9.9E-4	9.9E-4	1.1E-2	9.9E-4	0.8	7
F	1.0E-2	2.0E-2	2.0E-2	2.0E-2	2.0E-2	2.0E-2	9.9E-4	7.0E-3	9.9E-4	0.8	9
NA	1.0E-3	10.0	10.0	10.0	10.0	8.0E-2	1.0E-2	2.0E-2	2.0E-1	0.5	11
MG	1.0E-3	9.9E-4	9.9E-4	9.9E-4	9.9E-4	1.8E-2	9.9E-4	9.9E-4	1.6	1.9E-4	12
SI	1.0E-3	3.5E-1	3.5E-1	3.5E-1	3.5E-1	4.0E-5	9.9E-4	2.0E-5	9.9E-4	8.8E-3	14
P	1.0E-3	4.0	4.0	4.0	4.0	5.0E-2	1.9E-1	1.5E-2	10.0	0.8	15
S	1.0E-3	2.0	2.0	2.0	2.0	2.0E-1	9.9E-4	1.5E-2	9.9E-4	3.4E-2	16
CL	1.0E-3	50.0	50.0	50.0	1.0	3.0E-2	3.0E-2	2.0E-2	9.9E-4	0.8	17
AR	0.0	0.0	0.0	0.0	0.0	0.0	0.0	0.0	0.0	0.8	18
K	1.0E-3	3.0	3.0	3.0	3.0	1.8E-2	9.9E-4	7.0E-3	9.9E-4	0.5	19
CA	1.0E-3	2.0	2.0	2.0	2.0	1.6E-3	4.4E-2	8.0E-3	4.4E-1	1.9E-4	20
SC	1.0E-3	1.0E-2	1.0E-2	1.0E-2	1.0E-2	6.0E-3	4.0E-3	2.5E-6	9.9E-4	2.7E-4	21
CR	1.0E-3	4.0E-2	4.0E-2	4.0E-2	4.0E-3	9.0E-3	9.9E-4	1.0E-5	9.9E-4	4.7E-3	24
MN	1.0E-3	7.0E-1	7.0E-1	7.0E-1	2.0E-1	5.0E-4	5.0E-2	3.0E-4	6.5E-2	1.1E-2	25
FE	1.0E-3	2.0E-2	2.0E-2	2.0E-2	5.0E-3	2.0E-2	1.5	5.0E-5	1.3	1.8E-2	26
CO	1.0E-3	1.0E-1	1.0E-1	1.0E-1	4.0E-3	2.0E-2	5.0E-1	1.0E-4	1.0E-1	3.0E-2	27
NI	1.0E-3	1.0E-1	1.0E-1	1.0E-1	5.0E-2	2.0E-3	1.0E-3	1.0E-3	1.0E-1	4.6E-3	28
CU	1.0E-3	5.0E-1	5.0E-1	5.0E-1	5.0E-2	9.0E-3	5.1E-1	2.0E-3	4.9E-1	2.9E-3	29
ZN	1.0E-3	2.0	2.0	2.0	2.0	1.0E-1	6.5	1.0E-2	2.6	2.8E-4	30
GA	1.0E-3	1.0E-2	1.0E-2	1.0E-2	1.0E-3	3.0E-4	9.9E-4	1.0E-5	9.9E-4	1.8E-4	31
AS	1.0E-3	1.0E-2	1.0E-2	1.0E-2	1.0E-2	1.5E-3	8.3E-1	8.0E-5	9.9E-4	1.3E-3	33
SE	1.0E-3	5.0E-1	5.0E-1	5.0E-1	5.0E-2	1.0	8.5	2.3E-2	9.3	1.7E-2	34
BR	1.0E-2	7.6E-1	7.6E-1	7.6E-1	7.6E-1	2.0E-2	4.0E-3	2.0E-2	1.6	0.11	35
KR	0.0	0.0	0.0	0.0	0.0	0.0	0.0	0.0	0.0	0.8	36
RB	1.0E-3	3.0E-1	3.0E-1	3.0E-1	3.0E-1	1.0E-2	2.0	1.0E-2	3.0	4.4E-3	37
SR	1.0E-3	2.0	2.0	2.0	2.0E-1	8.0E-4	3.5E-2	1.3E-3	3.0E-1	2.7E-3	38
Y	1.0E-3	1.0E-2	1.0E-2	1.0E-2	1.0E-3	1.0E-3	1.0E-2	5.0E-6	2.0E-3	5.0E-4	39
ZR	1.0E-3	4.0E-2	4.0E-2	4.0E-2	4.0E-2	1.2E-6	6.4E-5	5.5E-7	1.9E-4	5.3E-4	40
NB	1.0E-3	4.0E-2	4.0E-2	4.0E-2	8.0E-3	2.6E-7	3.1E-4	4.1E-7	1.3E-3	2.7E-3	41
MO	1.0E-3	1.0	1.0	1.0	1.0E-1	1.2E-3	1.9E-1	1.7E-3	7.8E-1	0.8	42
TC	1.0E-3	40.0	40.0	40.0	40.0	9.9E-4	3.0E-2	3.0E-4	3.0	0.8	43
RU	1.0E-3	2.0E-1	2.0E-1	2.0E-1	2.0E-1	2.0E-3	7.0E-3	6.0E-7	6.0E-3	7.6E-4	44
RH	1.0E-3	50.0	50.0	50.0	5.0	1.0E-3	3.0E-4	5.0E-3	4.0E-3	4.4E-3	45
PD	1.0E-3	3.0E-1	3.0E-1	3.0E-1	5.0E-2	1.0E-3	3.0E-4	5.0E-3	4.0E-3	4.6E-3	46
AG	1.0E-3	6.0E-1	6.0E-1	6.0E-1	6.0E-2	2.0E-3	9.9E-4	2.5E-2	9.9E-4	0.27	47
CD	1.0E-3	2.0	2.0	2.0	6.0E-1	4.0E-4	8.4E-1	1.2E-4	1.0E-1	6.3E-4	48
IN	1.0E-3	1.0E-2	1.0E-2	1.0E-2	1.0E-3	4.0E-3	9.9E-4	2.0E-4	9.9E-4	1.8E-4	49
SN	1.0E-3	1.0E-1	1.0E-1	1.0E-1	1.0E-2	1.0E-2	9.9E-4	1.0E-3	9.9E-4	2.7E-3	50
SB	1.0E-3	5.0E-2	5.0E-2	5.0E-2	5.0E-2	1.0E-3	6.0E-3	7.5E-4	7.0E-2	4.2E-2	51
TE	1.0E-3	5.0	5.0	5.0	5.0E-1	7.0E-3	8.5E-2	4.5E-4	5.2	0.8	52
I	1.0E-2	4.0E-1	4.0E-1	4.0E-1	4.0E-1	2.0E-3	1.8E-2	1.2E-2	2.8	0.8	53
XE	0.0	0.0	0.0	0.0	0.0	0.0	0.0	0.0	0.0	0.8	54
CS	1.0E-3	2.0E-2	2.0E-2	2.0E-2	1.0E-2	3.0E-2	4.4	7.0E-3	4.9E-1	1.1E-3	55
BA	1.0E-3	4.0E-2	4.0E-2	4.0E-2	4.0E-3	5.0E-4	8.1E-4	4.8E-4	1.5	9.5E-5	56
LA	1.0E-3	1.0E-2	1.0E-2	1.0E-2	3.0E-4	5.0E-3	1.0E-1	2.5E-6	9.0E-3	4.1E-4	57
CE	1.0E-3	4.0E-2	4.0E-2	4.0E-2	4.0E-3	2.0E-3	1.0E-2	4.0E-5	5.0E-3	5.0E-4	58
PR	1.0E-3	1.0E-2	1.0E-2	1.0E-2	1.0E-3	5.0E-3	3.0E-2	2.5E-6	5.0E-3	5.0E-4	59
ND	1.0E-3	1.0E-2	1.0E-2	1.0E-2	1.0E-3	5.0E-3	4.0E-3	2.0E-5	2.0E-4	4.1E-4	60
PM	1.0E-3	1.0E-2	1.0E-2	1.0E-2	1.0E-3	5.0E-3	2.0E-3	2.5E-6	2.0E-2	5.0E-4	61
SM	1.0E-3	1.0E-2	1.0E-2	1.0E-2	2.0E-3	5.0E-3	4.0E-3	2.0E-5	7.0E-3	4.1E-4	62
EU	1.0E-3	1.0E-2	1.0E-2	1.0E-2	2.0E-3	6.0E-3	4.0E-3	2.0E-5	7.0E-3	5.0E-4	63
GD	1.0E-3	5.0E-2	5.0E-2	5.0E-2	5.0E-3	2.0E-3	9.9E-4	6.0E-5	9.9E-4	4.1E-4	64
TB	1.0E-3	2.6E-3	2.6E-3	2.6E-3	2.6E-3	5.0E-3	4.0E-3	2.5E-6	7.0E-3	4.1E-4	65
DY	1.0E-3	9.9E-4	9.9E-4	9.9E-4	9.9E-4	5.3E-3	9.9E-4	5.0E-6	9.9E-4	4.1E-4	66
HO	1.0E-3	1.0E-2	2.0E-2	1.0E-2	2.7E-3	5.0E-3	4.0E-3	2.5E-6	7.0E-3	4.1E-4	67
ER	1.0E-3	1.0E-2	1.0E-2	1.0E-2	1.0E-2	4.0E-3	9.9E-4	2.0E-5	9.9E-4	4.1E-4	68
HF	1.0E-3	1.0E-2	1.0E-2	1.0E-2	2.0E-3	4.0E-4	9.9E-4	2.0E-5	9.9E-4	1.8E-4	72
TA	1.0E-3	9.9E-4	9.9E-4	9.9E-4	9.9E-4	9.9E-4	9.9E-4	3.0E-6	9.9E-4	4.1E-4	73
W	1.0E-3	3.0	3.0	3.0	3.0E-1	3.7E-2	9.9E-4	3.0E-4	9.9E-4	1.8E-3	74
RE	1.0E-3	9.9E-4	9.9E-4	9.9E-4	9.9E-4	9.9E-4	9.9E-4	1.0E-3	9.9E-4	3.3E-2	75
OS	1.0E-3	0.015	0.0035	0.0035	0.0035	0.4	0.1	0.005	0.09	1.8E-3	76
IR	1.0E-3	1.0E-1	1.0E-1	1.0E-1	4.0E-3	2.0E-3	9.9E-4	2.0E-6	9.9E-4	1.8E-3	77
AU	1.0E-3	4.0E-1	4.0E-1	4.0E-1	4.0E-2	5.0E-3	9.9E-4	1.0E-5	9.9E-4	1.1E-2	79
HG	1.0E-3	1.0	1.0	1.0	1.0E-1	1.0E-1	1.1E-2	4.0E-4	9.9E-4	4.6E-4	80
TL	1.0E-3	9.9E-4	9.9E-4	9.9E-4	9.9E-4	9.9E-4	9.9E-4	2.0E-3	9.9E-4	0.5	81

New FTRANS.DAT, Continued:

Element	Dep Vel m/sec	Leafy Veg	Root Veg	Fruit --	Grain --	Beef day/kg	Poulty day/kg	Milk day/L	Egg day/kg	Leaching Factor	Z
PB	1.0E-3	1.0E-1	1.0E-1	1.0E-1	1.0E-2	4.0E-4	9.9E-4	3.0E-5	9.9E-4	4.5E-4	82
BI	1.0E-3	6.0E-1	6.0E-1	6.0E-1	6.0E-1	1.7E-2	9.9E-4	5.0E-4	9.9E-4	2.7E-5	83
PO	1.0E-3	1.0E-2	1.0E-2	1.0E-2	1.0E-3	4.5E-3	9.9E-4	1.2E-4	9.9E-4	2.7E-5	84
RN	0.0	0.0	0.0	0.0	0.0	0.0	0.0	0.0	0.0	0.8	86
FR	1.0E-3	2.0E-2	2.0E-2	2.0E-2	1.0E-2	3.0E-2	4.4	7.0E-3	4.9E-1	1.1E-3	87
RA	1.0E-3	1.0E-1	1.0E-1	1.0E-1	1.0E-2	9.0E-4	9.9E-4	2.0E-4	2.0E-5	5.9E-4	88
AC	1.0E-3	1.0E-2	1.0E-2	3.0E-3	3.0E-4	4.0E-4	4.0E-3	2.0E-5	2.0E-3	1.3E-3	89
TH	1.0E-3	4.0E-3	4.0E-3	4.0E-3	4.0E-4	5.0E-3	4.0E-3	2.5E-6	2.0E-3	5.3E-4	90
PA	1.0E-3	5.0E-2	5.0E-2	5.0E-2	2.0E-2	5.0E-3	4.0E-3	2.5E-6	2.0E-3	1.3E-3	91
U	1.0E-3	4.0E-3	4.0E-3	4.0E-3	2.0E-4	2.0E-4	1.2	6.0E-4	9.9E-1	1.3E-3	92
NP	1.0E-3	1.0	1.0	1.0	1.0E-1	1.0E-3	4.0E-3	1.0E-5	2.0E-3	3.3E-3	93
PU	1.0E-3	4.0E-4	4.0E-4	4.0E-4	4.0E-5	2.0E-6	1.5E-4	1.0E-7	8.0E-3	1.3E-3	94
AM	1.0E-3	2.0E-3	2.0E-3	2.0E-3	2.0E-4	2.0E-5	2.0E-4	3.0E-7	9.0E-3	1.3E-3	95
CM	1.0E-3	2.0E-3	2.0E-3	2.0E-3	2.0E-4	5.0E-3	4.0E-3	3.0E-7	2.0E-3	1.3E-4	96
CF	1.0E-3	2.5E-3	2.5E-3	2.5E-3	2.5E-3	5.0E-3	4.0E-3	7.5E-7	2.0E-3	4.1E-4	98